NEWEX

Experience New

NEWEX INTERNATIONAL CO., LTD

PHILEXI is a trademark of NEWEX INTERNATIONAL CO., LTD

Hongkong Office Address:

FLAT/RM 02, 7/F, SPA CENTRE,
NO.53-55 LOCKHART ROAD,
WAN CHAI, HONG KONG

Sourcing Manager/ Sales Manager: Mr. Justin
Whatsapp/Mobile/Wechat: +8613928822021
Skype ID: liangshizong
Email: justin@philexi.com, justin.liang@newexintl.com

Guangzhou Office Address:

Room 505, BLDG A, Hengda Business
Center, 3rd Bigui Road, Luopu Street,
Panyu District, Guangzhou, China

LANDA

专心致志 创芯超越

QUALITY ORIENTION CORE INNOVATION

2022

家用、商用空调压缩机

COMPRESSOR FOR RAC&CAC

珠海凌达压缩机有限公司

ZHUHAI LANDA COMPRESSOR CO., LTD.

Contents
目录

01企业简介 Company Profile---(03)

●企业概况 Brief Introduction---(03)
●企业荣誉 Company Honors---(04)
●发展历程 Development Milestones---(05)

02产品介绍 Product Introduction---(07)

●旋转压缩机 Rotary Compressor---(07)

▶产品命名规则及测试工况 Naming Rules and Test Conditions---(07)
▶家用空调压缩机 Compressor for Residential Air Conditioners---(10)
▶家用空调压缩机型谱 Product Spectrum---(12)

①环保冷媒压缩机 New Environmental Refrigerant Compressor---(13)
②通用压缩机 Compressor for General-Purpose---(21)
③T3中东向压缩机 T3 Compressor for Middle East Market---(31)
④印度向压缩机Compressor for Indian Market---(37)
⑤宽电压压缩机 Wide Voltage Compressor---(38)

▶商用空调压缩机 Compressor for Commercial Air Conditioners---(39)

①轻商用压缩机 Light Commercial Compressor---(40)
②风管机 Duct AC Compressor---(44)

●压缩机标准尺寸示意图 Compressor Standard Size Diagram---(45)
●压缩机包装 Packing of Compressor---(50)
●压缩机标准附件 Compressor Standard Accessories---(51)

03技术服务 Technical Services---(52)

企业概况 Brief Introduction

珠海凌达压缩机有限公司始建于1985年，是一家集研发、生产、销售、服务于一体的空调压缩机专业生产企业，同时也是我国家用空调压缩机行业较早且少有具有规模化、专业化的民族企业。2004年成为珠海格力电器股份有限公司全资控股子公司。

凌达致力于打造引领压缩机行业的绿色环保高新技术企业，目前拥有珠海、合肥、郑州、武汉、重庆五大生产基地，三个办事处，年产能6000万台，公司现有员工7000余人，其中技术管理人员1000余人，专职从事研发人员有600余人，压缩机年产能达6000万台。

Founded in 1985, Zhuhai Landa Compressor Co., Ltd. is a large-scale, professional and domestic compressor manufacturer, mainly specializing in R&D, production, sales and services of the air-conditioner compressor. In 2004, Landa became a subsidiary wholly owned by Gree Electric Appliances.

Landa is committed to creating a high tech and green enterprises leading the compressor industry.So far,the company has 5 production bases in Zhuhai, Hefei, Zhengzhou, Wuhan and Chongqing , and 3 offices and over 7000 employees , including 1000 technical and administrative staffs and more than 600 R&D technicians with the annual capacity of 60 million units.

企业荣誉 Company Honors

在不断追求卓越的路上，珠海凌达也得到社会各级政府及协会的认可，获得了包括"全国质量奖"、"国家知识产权示范企业"、"高新技术企业"、"全国质量标杆"、"中国轻工百强"、"广东省政府质量奖"、"广东省重点企业技术中心"、"广东省工程技术研究中心"、"广东省知识产权示范企业"、"广东省名牌产品"、"珠海市市长质量奖"等多项荣誉。

On the way to make progress, Zhuhai Landa has been recognized by the government and associations at all levels with honors, such as the China Quality Award, the National Intellectual Property Demonstration Enterprise, High and New-Technology Enterprise, National Quality Benchmarking Enterprise, Top 100 Enterprises in National Light Industry, Guangdong Governmental Quality Award, Guangdong Key Enterprise Technical Center, Guangdong Engineering Technology Center, Guangdong Intellectual Property Demonstration Enterprise, Guangdong Famous Brand, Zhuhai Mayor Quality Award, etc.

企业简介 Company Profile

发展历程 Development Milestones

1985

• 我司是我国较早引入全封闭回转压缩机技术，也是我国少有的具有规模化、专业化的空调压缩机生产企业。
Landa was not only one of the first enterprises introduced hermetic rotarycompressor technology, but also a large- scale and professional domestic AC compressor manufacturer.

1986

• 投产国内第一台Supearl滑片式回转压缩机，生产设备全部由美国惠而浦（Whirlpool）公司引进。
Landa started the production of Supearl sliding-vane rotary compressor with the equipment introduced from Whirlpool.

1990

• 产品规格增至28个，产品功率范围扩大至50-1100W，产品主要用于冰箱、冷冻柜、冷藏箱、空调以及除湿机、真空泵。
Landa developed 28 models with the power range expanded to 50-1100W, which were mainly used for refrigerators, freezers, air conditioners, dehumidifiers and vacuum pumps.

1992

• 从Rotorex引进具有国际先进水平的滚动转子式压缩机技术。从美国、日本引进机加工。
Landa introduced the international-leading rotary compressor technology from Rotorex, as well as the advanced processing equipment from US and Japan.

1994

• 开始生产国内第一代滚动转子式压缩机，以C48系列为主。
Started production of the first generation of rolling-piston rotary compressor, mainly C48 series.

1996-2004

• 第二代滚动转子压缩机技术系列化，自主研发C55系列。
The technology of the second generation was further improved, the C55 series was developed successfully.

2006

• 研发并投产第三代紧凑型滚动转子式压缩机C44/C49。
The third generation rotary compressor with compact structures was developed and put into production.

2008

• 凌达全面改善各系列产品能效，大幅提高压缩机匹配适用性。
Landa generally improved the energy efficiency of each series products so that it largely improved compressor applicability.
• 研发出针对北美窗机市场的小型化产品C39系列。
Landa developed C39 series products, which was small in size and against window-type air-conditioners in North American market.
• 首款R290压缩机获得项目验收。
The first R290 compressor passed project acceptance.
• 研发出采用环保R410A工质的直流变频空调压缩机。
The R410A compressor for DC inverter air-conditioner was developed.

2009

• 研发出双缸产品。
Developed the twin-cylinder compressors.
• 研发出专用于除湿机的压缩机。
Developed the compressors for dehumidifiers.
• 研发出热泵热水器专用压缩机。
Developed the compressors for heat pump water heaters.

2010

• 研发出R290空调QXD-C184压缩机。
Developed the QXD-C184 compressors for R290 air conditioners.
• 研发出中东专用压缩机。
Developed the compressors for Middle East market.

2011

• 研发出定频超高效压缩机。
Developed the fixed-speed super high efficiency compressors.

2012

• 研发出无稀土压缩机。
Developed the rare earth-free compressors.
• 研发出卧式低温冷藏用压缩机。
Developed the horizontal compressors for cryogenic temperature refrigeration.

2013

• 研发出定频增焓压缩机。
Developed the fixed speed vapor injection compressors.

2014

• 优化超低温冷藏领域产品。
Improved the compressors for super cryogenic temperature refrigeration field.

2015

• 研发出干衣机专用压缩机并实现量产。
The compressors for heat pump dryers were developed and mass produced.
• 为满足欧洲高效除湿机和内销1P空调的轻巧化，我司成功量产C42系列压缩机。
The C42 series was mass produced for the hi-efficient dehumidifiers in European market and small 1HP air conditioners sold in domestic market.
• 全新开发C63系列产品5HP压缩机。
Developed C63 series compressors with 5HP capacity.

2016

• N系列高效小型化压缩机量产。
N series high efficiency and small compressors were put into mass production.
• 三缸双级变容积比压缩机量产。
Three-cylinder twin-stage variable displacement compressors were put into mass production.

2017

• 大规格冷冻冷藏用压缩机量产。
Large capacity compressors for freezing and refrigeration were put into production.
• 10~12m新能源大巴用压缩机量产。
The compressor was for 10~12m new energy bus put into production.

2018

• 中东沙特特高效压缩机专属工艺开发成功。
Successfully developed exclusive process for super high efficiency compressor against Saudi Arabia market in Middle East.

2019

• 研发出 G-EVI高效采暖热泵压缩机。
Developed the G-EVI HP compressors.

产品介绍 Product Introduction

产品命名规则Naming Rules

旋转压缩机 Rotary Compressor

命名规则一 Naming Rules Ⅰ

Q X C S H - B 17 x B 0 90 A R

全封闭式
Hermetic

X 旋转立式
Rotary Vertical
Y 旋转卧式
Rotary Horizontal

代号 Code	制冷剂 Refrigerant
/	R22
A	R410A
B	CO2
C	R407C
D	R290
E	R134a
F	R32/R410A通用（具体以规格书为准）
G	R404A
I	R1234yf/R134a/R513A通用
J	R600a

代号 Code	气缸结构 Cylinder Structure
……	单缸 Single Cylinder
S	双缸单级 Twin-Cylinder& Single-Stage
T	双缸双级 Twin-Cylinder& Twin-Stage
V	双缸变容 Twin-Cylinder& Variable Displacement
N	双缸双级变容 Twin-Cylinder&Twin-Stage& Variable Displacement
W	三缸双级变容 Three-Cylinder&Twin-Stage& Variable Displacement
U	三缸双级压缩（非变容） Three-Cylinder& Twin-Stage Compression (Non-Variable)
a	单缸单级增焓 Single-Cylinder& Single-Stage &Enthalpy-Increasing
b	双缸单级增焓 Twin-Cylinder& Single-Stage &Enthalpy-Increasing

代号 Code	用途 Applications
/	T1或不需要标识用途
H	T3
R	热泵热水器 HPWH
L	低温冷藏 Low Temp. Refrigeration
K	风管机 Duct AC
M	干衣机 HPD
O	除湿机 Dehumidifier
Y	移动机 Mobile AC
P	低电压空调 low-Voltage AC

气缸名义工作容积:2~3位数表示
In 2 or 3-digits Cylinder nominal displacement

代号 Code	定子外径 Stator O.D.
A	¢ 101
B	¢ 112
C	¢ 121.7
D	¢ 125
E	¢ 133.5
F	¢ 139
G	¢ 88
H	¢ 161
J	¢ 58.6
K	¢ 81.4
M	¢ 107
N	¢ 94
T	¢ 150
P	¢ 50.5
S	¢ 66.0
U	¢ 89.8

分液器规格
Accumulator Spec.

特殊说明
Special Statement

改进顺次号
S/N of Improvement

安装板角度
Angle of Mounting Plate

安装板尺寸
Mounting Plate Spec.

代号 Code	电源 Power Supply
……	220V-240V,50Hz
r	208V-230V,60Hz
x	115V,60Hz
v	127V,60Hz
j	交流变频 AC Inverter
z	直流变频 DC Inverter
s	380V,50Hz,三相电源 Three-Phase Power Supply
w	220V,60Hz,三相电源 Three-Phase Power Supply
y	265V,60Hz
u	230V,50Hz
m	380V,60Hz,三相电源 Three-Phase Power Supply

命名规则二 Naming RulesⅡ

Y A T u 72 - A A 017 A A A A - A

…… 旋转立式
Y 旋转卧式

代号 Code	制冷剂 Refrigerant
R	R22
A	R410A
B	CO2
C	R407C
D	R290
E	R134a
F	R32
G	R404A
I	R1234yf
J	R600a

代号 Code	用途 Applications
A	北美/中国高效空调 NA/China High Efficient AC
B	北美单元机(超高效)空调 NA Unit AC(Super-efficient)
C	热带T3高效空调 T3 High-Efficiency AC for Tropical Areas
F	超低温冷冻 Ultra-Low Temp. Refrigeration
G	中高温冷冻冷藏 Mid-High Temp. Refrigeration
H	热带T3普通空调 T3 Common AC for Tropical Areas
J	舰船 Naval Ship
K	风管机 Duct AC
L	低温冷藏 Low Temp. Refrigeration
M	干衣机 HPD
O	除湿机 Dehumidifier
P	低电压空调 Low-Voltage AC
Q	车载压缩机 Vehicle Compressor
R	热泵热水器 HPWH
S	基站空调 Base Station AC
T	一般空调 Common AC
Y	移动机 Mobile AC

电压
Voltage

代号 Code	电源 Power Supply
……	220V-240V,50Hz
r	208V-230V,60Hz
x	115V,60Hz
v	127V,60Hz
j	交流变频 AC Inverter
z	直流变频 DC Inverter
s	380V,50Hz,三相电源 Three-Phase Power Supply
w	220V,60Hz,三相电源 Three-Phase Power Supply
y	265V,60Hz
u	230V,50Hz
m	380V,60Hz,三相电源 Three-Phase Power Supply

气缸名义工作容积:3位数表示
In 3-digits Cylinder nominal displacement

代号 Code	气缸结构 Cylinder Structure
A	单缸 Single Cylinder
S	双缸单级 Twin-Cylinder& Single-Stage
T	双缸双级 Twin-Cylinder& Twin-Stage
V	双缸变容 Twin-Cylinder& Variable Displacement
N	双缸双级变容 Twin-Cylinder& Twin-Stage&Variable Displacement
W	三缸双级变容 Three-Cylinder& Twin-Stage&Variable Displacement
U	三缸双级压缩（非变容） Three-Cylinder& Twin-Stage Compression (Non-Variable)

改进顺次号
S/N of Improvement

安装板角度
Angle of Mounting Plate

安装板孔径
Mounting Plate I.D.

分液器规格
Accumulator Spec.

代号 Code	电机特点 Motor Features
A	钕铁硼电机 NdFeB Motor
B	铁氧体电机 Ferrite Motor
C	112电机 112 Motor
D	单相异步电机 Single-Phase Asynchronous Motor
E	101电机 101 Motor
F	三相异步电机 Three-Phase Asynchronous Motor

系列代号 Series Code	定子外径 Stator O.D.
A	¢ 101
B	¢ 112
C	¢ 121.7
D	¢ 125
E	¢ 133.5
F	¢ 139
G	¢ 88
H	¢ 161
J	¢ 58.6
K	¢ 81.4
M	¢ 107
N	¢ 94
T	¢ 150
P	¢ 50.5
S	¢ 66
U	¢ 89.8

旋转式压缩机测试工况
Test Conditions

适用工况 Applicable Working Conditions	冷凝温度℃ Condensing Temp.	蒸发温度℃ Evaporating Temp.	过冷度℃ Supercooling Degree	吸气温度℃ Suction Temp.	环境温度℃ Ambient Temp.
ASHRAE/T	54.4	7.2	8.3	35	35
国标高能效工况 GB Hi-efficiency Working Condition	46	7.2	8.3	18.3	35
高能效工况 Hi-efficiency Working Condition	45	7.2	8.3	18.3	35
北美高能效工况 High-energy/efficiency Condition for North America	45	12	5	24	35
干衣机工况 HPD condition	70	25	9	35	35
冷冻冷藏工况 Freezing/Refrigeration Condition	54.4	-23.3	22.2	18.3	32.2
变频工况 Inverter Condition	46	10	5	18	35
变频高能效工况 Inv. High Energy Efficiency Condition	49	10.5	8	24	35

COMPRESSOR FOR RESIDENTIAL AIR CONDITIONERS
家用空调压缩机

▪家用空调压缩机制冷原理 Refrigeration Principle

低温低压气态冷媒进入压缩机，通过压缩机压缩后，形成高温高压气态冷媒；然后通过冷凝器，在轴流风扇的作用下，向室外放热，形成中温高压液态冷媒；然后通过膨胀阀（或毛细管），形成中温低压气液混合冷媒；最后通过蒸发器，在风扇作用下，从室内吸热，形成低温低压气态冷媒。

Low temp. and low pressure gas refrigerant enters the compressor to form a high temp. and high pressure refrigerant after compressed by the compressor; then, through the condenser, under the action of the axial flow fan, heat is released to the outside to make a medium-temp. high-pressure liquid refrigerant; after that, forming a medium-temp. low-pressure gas-liquid mixed refrigerant through the expansion valve(or capillary); and finally, the evaporator and fan absorb heat from the room to generate a low temp. and low pressure gas refrigerant.

房间空调原理图
Schematic Diagram of Room AC

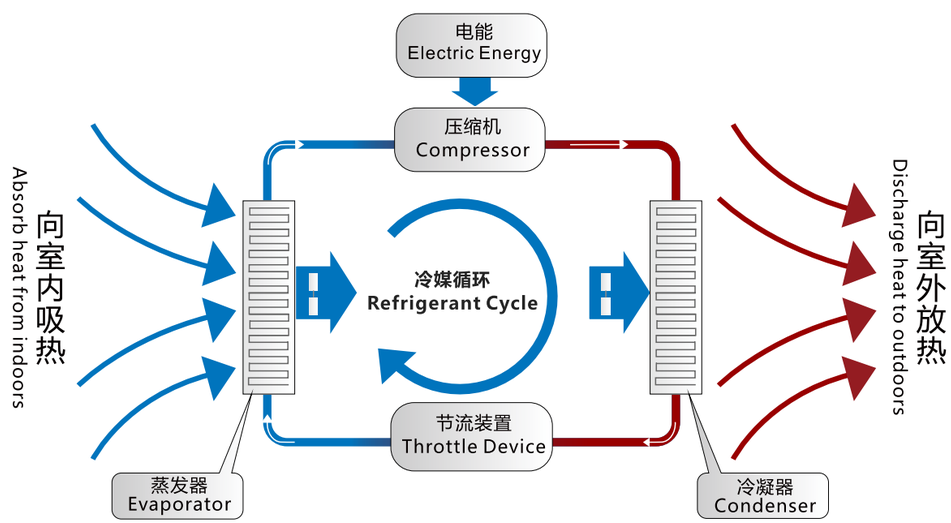

▪家用空调压缩机型谱 Product Spectrum

定频压缩机 Fixed Speed Compressor

产品类别 Product Category			压缩机能力范围 Capacity Range								
冷媒 Refrigerant	频率 Frequency	电压V Voltage	BTU/h	3412	13648	20472	27296	34120	40944	47768	54592
			W	1000	4000	6000	8000	10000	12000	14000	16000
R22	50Hz	220V-240V	(4500-30000 BTU/h)								
		380V	(15000-30000 BTU/h)								
	60Hz	208V-230V & 127V	(5000-27000 BTU/h)								
R410A	50Hz	220V-240V	(3500-37000 BTU/h)								
	60Hz	208V-230V & 115V	(4500-40000 BTU/h)								
R32	50Hz	220V-240V	(3500-35000 BTU/h)								
		380V	(10000-30000 BTU/h)								
	60Hz	208-230V	(4800-15000 BTU/h)								
		260-350V	(10000-31000 BTU/h)								
		115V	(5500-15000 BTU/h)								
R290	50Hz	220V-240V & 220-240(230)V	(4000-17000 BTU/h)								

变频压缩机 Inverter Compressor

产品类别 Product Category			压缩机能力范围 Capacity Range								
冷媒 Refrigerant	频率 Frequency	电压V Voltage	BTU/h	6825	17060	27296	37532	47768	58004	68240	78476
			W	2000	5000	8000	11000	14000	17000	20000	23000
R410A	15-120Hz	DC	(25000-53000 BTU/h)								
R32	15-120Hz	DC	(10000-58000 BTU/h)								
R290	15-120Hz	DC	(10780-17828 BTU/h)								

①新环保冷媒压缩机New Environmental Refrigerant Compressor

产品特点 Product Features

R32压缩机产品特点
Features of R32 Compressor

●环保冷媒：臭氧层破坏潜能ODP=0
Ozone depletion potential (ODP) is zero.
●低碳冷媒：GWP=675，为R410A冷媒的32%
Global warming potential (GWP) is 675, 32% of R410A refrigerant.
●应用范围：压缩机广泛应用于内销、泰国、澳洲空调
Application range: Widely applied to ACs in domestic, Thailand and Australian market.
●长寿命：设计寿命达10年
Long service life: 10 years.
●高能效：同系统配置由R410A压缩机改为R32压缩机，制冷量提升10%能效提升5%
High energy efficiency: R32 compressors replace R410A in the same AC systems, the refrigerating capacity and energy efficiency are increased by 10 percent and 5 percent respectively.

R32明星产品 QXFS-H446s
R32 Star Product QXFS-H446s

●应用范围：国内首款批量R32冷媒5匹机
Application range:National first mass-produced 5HP ACs with R32 refrigerants.
●认可度高：年出货量超55万台
Large sales volume: Annual shipments exceed 550,000 units.
●低故障率：售后故障率较涡旋机低80%
Low failure rate: The failure rate is 80 percent lower than that of scroll compressor.
●专利产品：具有16项专利技术
Number of patents:16

R290压缩机产品特点
Features of R290 Compressor

●环保冷媒：臭氧层破坏潜能ODP为零
Ozone depletion potential (ODP) is zero.
●绿色冷媒：GWP=0.03
Global warming potential (GWP) is 0.03.
●应用范围广：可应用于空调，移动机，除湿机，热泵热水器，热泵干衣机，制冷饮水机，产品保鲜柜、展示柜等
Application range: ACs, mobile ACs, dehumidifiers, HPWH, HPD, refrigeration water dispensers, freezers and display cabinets，etc.
●低噪声/低振动：噪音振动比R22/R410A低
Low noise/low vibration: Noise and vibration are lower than R22/R410A.
●高可靠性：专属设计冷冻油及保护装置
High reliability: Unique refrigeration oil and protective devices.

R290明星产品 QXD-A121
R290 Star Product QXD-A121

●应用范围：除湿机，制冷饮水机
Application range: Dehumidifier, refrigeration water dispenser.
●认可度高：年出货量超25万台
Large sales volume: Annual shipments exceed 250,000 units.
●高能效：小型化高能效，适用于紧凑系统
High energy efficiency: Small and energy efficient, suitable for compact systems.
●低噪声/低振动：超静音无察觉运行
Low noise/vibration: Ultra-quiet operation.
●政府支持：联合国多边基金支持项目
Government support: Supported by UN Multilateral Fund.

压缩机产品规格 Compressor Spec.

R32 T1 [1φ]220-240V 50Hz

系列 Series	压缩机型号 Model	排量 Displ.(cc)	冷量 Capacity (Btu/h)	制冷量 Refrigerating Capacity (W)	功率 Power (W)	COP (W/W)	电容 Capacitor(μF)	测试工况 Test Conditions	压缩机高度 Compressor Height (mm)	排气管内径 Discharge Pipe ID (mm)	回气管内径 Suction Pipe ID (mm)
N	QXF-N037	3.7	3412	1000	273	3.66	12μf/450V	高能效工况 Hi-efficiency Working Condition	185.0	8.2	9.2
	QXF-N040	4.0	3821	1120	300	3.73	12μf/450V	高能效工况 Hi-efficiency Working Condition	185.0	8.2	9.2
	QXF-N058	5.8	5476	1605	430	3.73	20μf/450V	高能效工况 Hi-efficiency Working Condition	205.0	8.2	9.2
A	QXF-A040	4.0	3712	1088	293	3.71	15μf/450V	高能效工况 Hi-efficiency Working Condition	199.0	8.2	9.7
	QXF-A042	4.2	4113	1205	313	3.85	15μf/450V	高能效工况 Hi-efficiency Working Condition	199.0	8.2	9.7
	QXF-A050	5..0	4846	1420	369	3.84	15μf/450V	高能效工况 Hi-efficiency Working Condition	206.0	6.2	9.7
	QXF-A058	5.8	5323	1560	420	3.71	20μf/450V	高能效工况 Hi-efficiency Working Condition	215.0	8.2	9.7
	QXF-A062	6.2	6160	1805	475	3.80	20μf/450V	高能效工况 Hi-efficiency Working Condition	206.0	8.2	9.7
	QXF-A066	6.6	6398	1875	491	3.82	20μf/450V	高能效工况 Hi-efficiency Working Condition	215.0	8.2	9.7
	QXF-A071	7.1	7029	2060	560	3.68	25μf/450V	高能效工况 Hi-efficiency Working Condition	215.0	6.2	9.7
	QXF-A075	7.5	7370	2160	554	3.90	20μf/450V	高能效工况 Hi-efficiency Working Condition	219.0	6.2	9.7
	QXF-A083	8.3	8218	2408	634	3.80	25μf/450V	高能效工况 Hi-efficiency Working Condition	224.0	8.2	9.7
	QXF-A086	8.6	8372	2453	625	3.92	20μf/450V	高能效工况 Hi-efficiency Working Condition	224.0	6.2	8.2
	QXF-A088	8.6	8703	2550	654	3.90	30μf/450V	高能效工况 Hi-efficiency Working Condition	211.0	8.2	9.2
B	QXF-B092	9.2	8939	2620	647	4.05	25μf/450V	高能效工况 Hi-efficiency Working Condition	266.5	9.7	12.2
	QXF-B098	9.8	9656	2830	690	4.10	25uF/450V	高能效工况 Hi-efficiency Working Condition	261.5	9.7	12.2
	QXF-B102	10.2	9997	2930	718	4.08	30uF/450V	高能效工况 Hi-efficiency Working Condition	266.5	9.7	12.2
	QXF-B117	11.7	11447	3355	822	4.08	30uF/450V	高能效工况 Hi-efficiency Working Condition	266.5	9.7	12.2
	QXF-B120	12.0	11686	3425	835	4.10	30uF/450V	高能效工况 Hi-efficiency Working Condition	266.5	9.7	12.2
	QXF-B129	12.9	12624	3700	911	4.06	30uF/450V	高能效工况 Hi-efficiency Working Condition	266.5	9.7	12.2

①新环保冷媒压缩机New Environmental Refrigerant Compressor

R32 T1 [1φ]220-240V 50Hz

系列 Series	压缩机型号 Model	排量 Displ.(cc)	冷量 Capacity (Btu/h)	制冷量 Refrigerating Capacity (W)	功率 Power (W)	COP (W/W)	电容 Capacitor(μF)	测试工况 Test Conditions	压缩机高度 Compressor Height (mm)	排气管内径 Discharge Pipe ID (mm)	回气管内径 Suction Pipe ID (mm)
B	QXF-B133	13.3	13290	3895	955	4.08	35uF/450V	高能效工况 Hi-efficiency Working Condition	266.5	9.7	12.2
	QXF-B139	14.0	14092	4130	1025	4.03	35uF/450V	高能效工况 Hi-efficiency Working Condition	266.5	9.7	12.2
C	※QXF-C155	15.5	15252	4470	1077	4.15	40uF/450V	高能效工况 Hi-efficiency Working Condition	316.4	9.7	12.2
	※QXF-C170	17.0	16719	4900	1181	4.15	45uF/450V	高能效工况 Hi-efficiency Working Condition	316.4	9.7	16.2
	※QXF-C175	17.5	17231	5050	1226	4.12	45uF/450V	高能效工况 Hi-efficiency Working Condition	316.4	9.7	16.2
	※QXF-C184	18.4	18084	5300	1286	4.12	45uF/450V	高能效工况 Hi-efficiency Working Condition	316.4	9.7	16.2
	※QXF-C193	19.3	18937	5550	1347	4.12	50uF/450V	高能效工况 Hi-efficiency Working Condition	316.4	9.7	16.2
D	QXF-D17	17.0	16738	4906	1174	4.18	45uF/450V	高能效工况 Hi-efficiency Working Condition	319.5	9.7	16.2
	QXF-D175	17.5	17231	5050	1208	4.18	45uF/450V	高能效工况 Hi-efficiency Working Condition	319.5	9.7	16.2
	QXF-D18	18.0	17723	5194	1243	4.18	45uF/450V	高能效工况 Hi-efficiency Working Condition	319.5	9.7	16.2
	QXF-D184	18.4	18118	5310	1270	4.18	45uF/450V	高能效工况 Hi-efficiency Working Condition	319.5	9.7	16.2
	QXF-D193	19.3	19005	5570	1333	4.18	50uF/450V	高能效工况 Hi-efficiency Working Condition	319.5	9.7	16.2
E	QXF-E20	20.0	19755	5790	1385	4.18	55uF/450V	高能效工况 Hi-efficiency Working Condition	317.5	9.7	16.2
	QXF-E21	21.0	20643	6050	1476	4.10	55uF/450V	高能效工况 Hi-efficiency Working Condition	312.5	9.7	16.2
	QXF-E22	22.0	21649	6345	1548	4.10	60uF/450V	高能效工况 Hi-efficiency Working Condition	321.5	9.7	16.2
	QXF-E232	23.2	22808	6685	1630	4.10	60uF/450V	高能效工况 Hi-efficiency Working Condition	321.5	9.7	16.2
	QXF-E24	24.0	23594	6915	1666	4.15	60uF/450V	高能效工况 Hi-efficiency Working Condition	321.5	9.7	16.2
	QXF-E25	25.0	24635	7220	1740	4.15	60uF/450V	高能效工况 Hi-efficiency Working Condition	337.5	9.7	16.2
	QXF-E265	26.5	26068	7640	1841	4.15	60uF/450V	高能效工况 Hi-efficiency Working Condition	337.5	9.7	16.2
	QXF-E27	27.0	26560	7784	1876	4.15	60uF/450V	高能效工况 Hi-efficiency Working Condition	337.5	9.7	16.2

备注：型号带“※”,代表开发中。“▲”代表推荐机型。
Note: A model with “※” is under development.
A model with “▲” is the recommended model.

R32 T1 [1φ]220-240V 50Hz

系列 Series	压缩机型号 Model	排量 Displ.(cc)	冷量 Capacity (Btu/h)	制冷量 Refrigerating Capacity (W)	功率 Power (W)	COP (W/W)	电容 Capacitor(μF)	测试工况 Test Conditions	压缩机高度 Compressor Height (mm)	排气管内径 Discharge Pipe ID (mm)	回气管内径 Suction Pipe ID (mm)
E	QXF-E275	27.5	27051	7928	1910	4.15	60uF/450V	北美高能效 Hi-energy efficiency Condition for Northh America	337.5	9.7	16.2
	QXF-E280	28.0	27543	8072	1945	4.15	60uF/450V	高能效工况 Hi-efficiency Working Condition	337.5	9.7	16.2
	QXF-E290	29.0	28527	8361	2015	4.15	60uF/450V	高能效工况 Hi-efficiency Working Condition	337.5	9.7	16.2
	QXF-E295	29.5	29019	8505	2049	4.15	60uF/450V	高能效工况 Hi-efficiency Working Condition	337.5	9.7	16.2
	QXF-E305	30.5	30002	8793	2119	4.15	60uF/450V	高能效工况 Hi-efficiency Working Condition	337.5	9.7	16.2
SE	QXFS-E265	26.5	25786	7557	1843	4.10	60uF/450V	高能效工况 Hi-efficiency Working Condition	378.0	9.7	16.2
	QXFS-E270	27.0	26272	7700	1878	4.10	60uF/450V	高能效工况 Hi-efficiency Working Condition	378.0	9.7	16.2
	QXFS-E275	27.5	26759	7843	1913	4.10	60uF/450V	高能效工况 Hi-efficiency Working Condition	378.0	9.7	16.2
	QXFS-E280	28.0	27228	7980	1945	4.10	60uF/450V	高能效工况 Hi-efficiency Working Condition	378.0	9.7	16.2
	QXFS-E290	29.0	28219	8270	2017	4.10	60uF/450V	高能效工况 Hi-efficiency Working Condition	378.0	9.7	16.2
	QXFS-E295	29.5	28705	8413	2052	4.10	60uF/450V	高能效工况 Hi-efficiency Working Condition	378.0	9.7	16.2
	QXFS-E305	30.5	29678	8698	2121	4.10	60uF/450V	高能效工况 Hi-efficiency Working Condition	378.0	9.7	16.2
SF	QXFS-F265	26.5	26494	7765	1880	4.13	50uF/450V	高能效工况 Hi-efficiency Working Condition	366.2	9.7	16.2
	QXFS-F275	27.5	27494	8058	1951	4.13	50uF/450V	高能效工况 Hi-efficiency Working Condition	367.2	9.7	16.2
	QXFS-F325	32.5	32073	9400	2350	4.00	60uF/450V	高能效工况 Hi-efficiency Working Condition	375.2	9.7	16.2
	QXFS-F356	35.6	34973	10250	2615	3.92	60uF/450V	高能效工况 Hi-efficiency Working Condition	375.2	9.7	16.2

①新环保冷媒压缩机New Environmental Refrigerant Compressor

R32 T1 [1φ]115V 60Hz

系列 Series	压缩机型号 Model	排量 Displ.(cc)	冷量 Capacity (Btu/h)	制冷量 Refrigerating Capacity (W)	功率 Power (W)	COP (W/W)	电容 Capacitor(μF)	测试工况 Test Conditions	压缩机高度 Compressor Height (mm)	排气管内径 Discharge Pipe ID (mm)	回气管内径 Suction Pipe ID (mm)
G	QXF-G042x	4.2	5662	1659	366	4.52	35uF/250V	北美高能效 Hi-energy efficiency Condition for Northh America	192.0	6.2	9.7
N	QXF-N043x	4.3	4959	1453	379	3.83	35uF/250V	高能效工况 Hi-efficiency Working Condition	183.0	6.2	9.7
	QXF-N058x	5.8	6836	2003	520	3.85	40uF/250V	高能效工况 Hi-efficiency Working Condition	211.0	6.2	9.7
	QXF-N066x	6.6	7833	2295	595	3.86	45uF/250V	高能效工况 Hi-efficiency Working Condition	207.0	6.2	9.7
	QXF-N071x	7.1	8532	2500	658	3.80	50uF/250V	高能效工况 Hi-efficiency Working Condition	218.0	6.2	9.7
	QXF-N075x	7.5	8976	2630	675	3.90	50uF/250V	高能效工况 Hi-efficiency Working Condition	229.0	6.2	9.7
	QXF-N078x	7.8	9686	2750	705	3.90	50uF/250V	高能效工况 Hi-efficiency Working Condition	229.0	6.2	9.7
A	QXF-A050x	5.0	6109	1790	438	4.09	45uF/250V	高能效工况 Hi-efficiency Working Condition	206.0	8.2	9.7
	QXF-A052x	5.2	6099	1787	455	4.00	45uF/250V	高能效工况 Hi-efficiency Working Condition	206.0	8.2	9.7
	QXF-A053x	5.3	6263	1835	465	3.95	35uF/250V	高能效工况 Hi-efficiency Working Condition	206.0	8.2	9.7
	QXF-A066x	6.6	7882	2310	570	4.05	50uF/250V	高能效工况 Hi-efficiency Working Condition	220.0	8.2	9.7
	QXF-A068x	6.9	8155	2390	585	4.09	50uF/250V	高能效工况 Hi-efficiency Working Condition	220.0	8.2	9.7
	QXF-A075x	7.5	8928	2616	670	3.90	60μf/250V	高能效工况 Hi-efficiency Working Condition	219.0	8.2	9.7
	QXF-A081x	8.1	9648	2827	704	4.02	55uF/250V	高能效工况 Hi-efficiency Working Condition	219.0	8.2	9.7
	QXF-A083x	8.3	9792	2870	705	4.07	55uF/250V	高能效工况 Hi-efficiency Working Condition	224.0	8.2	9.7
	※QXF-A092x	9.2	11157	3270	818	4.00	55uF/250V	高能效工况 Hi-efficiency Working Condition	224.0	8.2	9.7
B	QXF-B098x	10.0	11737	3440	845	4.07	60μf/250V	高能效工况 Hi-efficiency Working Condition	260.5	8.2	12.2
	QXF-B100x	10.0	12044	3530	870	4.06	60μf/250V	高能效工况 Hi-efficiency Working Condition	261.5	9.7	9.7
	QXF-B102x	10.2	12283	3600	890	4.05	60μf/250V	高能效工况 Hi-efficiency Working Condition	266.5	9.7	8.2
	※QXF-B104x	10.4	12283	3600	878	4.10	60μf/250V	高能效工况 Hi-efficiency Working Condition	266.5	9.7	12.2
	※QXF-B106x	10.6	12693	3720	907	4.10	60μf/250V	北美高能效 Hi-energy efficiency Condition for Northh America	266.5	9.7	12.2
	※QXF-B109x	10.9	13102	3840	946	4.06	70μf/250V	高能效工况 Hi-efficiency Working Condition	266.5	9.7	12.2
	QXF-B117x	11.7	13904	4075	1006	4.05	60μf/250V	高能效工况 Hi-efficiency Working Condition	266.5	9.7	12.2

备注：型号带“※”,代表开发中。”▲”代表推荐机型。
Note: A model with “※” is under development.
A model with ”▲” is the recommended model.

R32 T1 [1φ]208-230V 60Hz

系列 Series	压缩机型号 Model	排量 Displ.(cc)	冷量 Capacity (Btu/h)	制冷量 Refrigerating Capacity (W)	功率 Power (W)	COP (W/W)	电容 Capacitor(μF)	测试工况 Test Conditions	压缩机高度 Compressor Height (mm)	排气管内径 Discharge Pipe ID (mm)	回气管内径 Suction Pipe ID (mm)
N	QXF-N043r	4.3	4896	1435	373	3.85	25μf/450V	高能效工况 Hi-efficiency Working Condition	187.0	6.2	9.7
	QXF-N078r	7.8	4896	2780	704	3.95	25μf/450V	高能效工况 Hi-efficiency Working Condition	208.5	8.2	9.2
A	QXF-A062r	6.2	7356	2156	542	3.98	25μf/450V	高能效工况 Hi-efficiency Working Condition	215	6.2	9.7
	QXF-A083r	8.3	9864	2891	750	3.86	25μf/450V	高能效工况 Hi-efficiency Working Condition	219	8.2	9.7
B	QXF-B088r	8.8	10441	3060	754	4.06	25μf/450V	高能效工况 Hi-efficiency Working Condition	261.5	9.7	12.2

R32 T1 [3φ]380V 50Hz

系列 Series	压缩机型号 Model	排量 Displ.(cc)	冷量 Capacity (Btu/h)	制冷量 Refrigerating Capacity (W)	功率 Power (W)	COP (W/W)	电容 Capacitor(μF)	测试工况 Test Conditions	压缩机高度 Compressor Height (mm)	排气管内径 Discharge Pipe ID (mm)	回气管内径 Suction Pipe ID (mm)
SF	QXFS-F265s	26.5	26443	7750	1824	4.25	/	高能效工况 Hi-efficiency Working Condition	378.2	9.7	16.2
	QXFS-F275s	27.5	27441	8042	1892	4.25	/	高能效工况 Hi-efficiency Working Condition	367.2	9.7	16.2
	※QXFS-F286s	28.6	10858	3182	2020	4.15	/	高能效工况 Hi-efficiency Working Condition	367.2	9.7	16.2
	QXFS-F41s	41.0	40944	12000	2965	4.05	/	高能效工况 Hi-efficiency Working Condition	380.2	9.7	16.2

备注：型号带“※”,代表开发中。“▲”代表推荐机型。
Note: A model with “※” is under development.
A model with ”▲” is the recommended model.

①新环保冷媒压缩机New Environmental Refrigerant Compressor

R290 T1 [1φ]220-240V 50Hz

系列 Series	压缩机型号 Model	排量 Displ.(cc)	冷量 Capacity (Btu/h)	制冷量 Refrigerating Capacity (W)	功率 Power (W)	COP (W/W)	电容 Capacitor(μF)	测试工况 Test Conditions	压缩机高度 Compressor Height (mm)	排气管内径 Discharge Pipe ID (mm)	回气管内径 Suction Pipe ID (mm)
N	QXD-N088	8.8	4652	1363	429	3.18	20uf/450V	ASHRAE/T	216.0	6.2	9.7
	QXD-N115	11.5	6102	1788	550	3.25	20uf/450V	ASHRAE/T	230.5	8.2	9.7
	※QXD-N121	12.1	6365	1865	575	3.24	20uf/450V	ASHRAE/T	230.5	8.2	9.7
A	QXD-A088	8.8	4625	1355	430	3.15	15uF/450V	ASHRAE/T	203.0	8.2	9.7
	QXD-A121	12.1	6451	1890	573	3.30	20uf/450V	ASHRAE/T	224.0	6.2	9.7
	QXD-A134	13.4	7253	2125	655	3.24	25uf/450V	ASHRAE/T	224.0	6.2	9.7
B	QXD-B125U	12.5	6724	1970	597	3.30	20uf/450V	ASHRAE/T	252.5	8.2	9.7
	QXD-B129	12.9	6945	2035	595	3.42	25μf/450V	ASHRAE/T	262.0	8.2	9.7
	QXD-B136	13.6	7326	2147	622	3.45	25μf/450V	ASHRAE/T	262.0	8.2	9.7
	QXD-B139	14.0	7508	2200	655	3.36	25uf/450V	ASHRAE/T	260.5	8.2	9.7
	QXD-B145	14.5	7850	2300	655	3.51	25μf/450V	ASHRAE/T	266.5	9.7	12.2
	QXD-B150	15.0	8121	2380	680	3.50	25μf/450V	ASHRAE/T	262.0	8.2	9.7
	QXD-B150U	15.0	8172	2395	706	3.39	25uF/450V	ASHRAE/T	263.5	8.2	9.7
	QXD-B155	15.5	8206	2405	701	3.43	25μf/450V	ASHRAE/T	262.0	8.2	12.2
	QXD-B155AU	15.5	8325	2440	728	3.35	25uF/450V	ASHRAE/T	263.5	8.2	9.7
	QXD-B160	16.0	8462	2480	729	3.40	25uF/450V	ASHRAE/T	262.0	8.2	9.7
	QXD-B160U	16.0	8462	2480	775	3.20	25uF/450V	ASHRAE/T	261.5	8.2	9.7
	※QXD-B170	17.0	9076	2660	800	3.32	25uF/450V	ASHRAE/T	251.5	9.7	9.7
	QXD-B175	17.5	9332	2735	824	3.32	25uF/450V	ASHRAE/T	260.5	9.7	12.2
	QXD-B180	18.0	9468	2775	813	3.41	25uF/450V	ASHRAE/T	273.5	8.2	9.7

备注：型号带“※”,代表开发中。”▲”代表推荐机型。
Note: A model with “※” is under development.
A model with ”▲” is the recommended model.

产品介绍 Product Introduction
New Eco-friendly Refrigerant 新环保冷媒

R290 T1 [1φ]220-240V 50Hz

系列 Series	压缩机型号 Model	排量 Displ.(cc)	冷量 Capacity (Btu/h)	制冷量 Refrigerating Capacity (W)	功率 Power (W)	COP (W/W)	电容 Capacitor(μF)	测试工况 Test Conditions	压缩机高度 Compressor Height (mm)	排气管内径 Discharge Pipe ID (mm)	回气管内径 Suction Pipe ID (mm)
B	QXD-B193	19.3	10151	2975	880	3.38	30uF/450V	ASHRAE/T	274.0	8.2	9.7
	※QXD-B210	21.0	10970	3215	980	3.30	30uF/450V	ASHRAE/T	277.5	8.2	9.7
	QXD-B210U	21.0	10970	3215	1040	3.09	30uF/450V	ASHRAE/T	277.5	8.2	9.7
	QXD-B212U	21.2	11123	3260	1045	3.12	35uF/450V	ASHRAE/T	274.0	8.2	9.7
	QXD-B222	22.1	11533	3380	1035	3.27	40uF/450V	ASHRAE/T	274.0	8.2	9.7
	※QXD-B222U	22.1	11516	3375	1075	3.14	35uF/450V	ASHRAE/T	274.0	8.2	9.7
	QXD-B228	22.8	11908	3490	1043	3.35	35uF/450V	ASHRAE/T	287.5	9.7	12.2
	QXD-B240	24.0	12488	3660	1109	3.30	35uF/450V	ASHRAE/T	288.0	8.2	12.2
	QXD-B245	24.5	12897	3780	1145	3.30	40uF/450V	ASHRAE/T	285.5	9.7	12.2
	QXD-B265	26.5	14126	4140	1220	3.39	35uF/450V	ASHRAE/T	292.5	8.2	9.7
C	QXD-C238	5.0	12287	3650	1070	3.41	35uF/450V	ASHRAE/T	288.0	9.7	12.2

R290 DC Inverter

系列 Series	压缩机型号 Model	排量 Displ.(cc)	冷量 Capacity (Btu/h)	制冷量 Refrigerating Capacity (W)	功率 Power (W)	COP (W/W)	测试频率 Test Frequency	测试工况 Test Conditions	压缩机高度 Compressor Height (mm)	排气管内径 Discharge Pipe ID (mm)	回气管内径 Suction Pipe ID (mm)
N	▲DTz-SN150	15	10782	3160	685	4.61	60Hz	变频工况 Inverter Condition	213	8.2	12.87
	※DTz-SN180-A	18	13187	3865	835	4.63	60Hz	变频工况 Inverter Condition	226	8.2	12.87
M	▲DTz-SM240	24	17828	5225	1088	4.8	60Hz	变频工况 Inverter Condition	240	8.2	12.87
B	QXD-B19z	18.3	11806	3460	1043	3.2	60Hz	变频工况 Inverter Condition	246	8.2	9.7

备注：型号带“※”,代表开发中。“▲”代表推荐机型。
QXIR-B122C130、QXIR-D253F050可通用R1234yf、R134a、R513A三种冷媒。

Note: A model with “※” is under development.
A model with “▲” is the recommended model.

②通用压缩机 Compressor for General-Purpose

压缩机产品规格 Compressor Spec.

R410A DC Inverter

系列 Series	压缩机型号 Model	排量 Displ.(cc)	冷量 Capacity (Btu/h)	制冷量 Refrigerating Capacity (W)	功率 Power (W)	COP (W/W)	测试频率 Test Frequency	测试工况 Test Conditions	压缩机高度 Compressor Height (mm)	排气管内径 Discharge Pipe ID (mm)	回气管内径 Suction Pipe ID (mm)
N	ATz-AN088	8.8	10833	3175	749	4.24	60Hz	变频工况 Inverter Condition	229.5	8.2	9.7
	ATz-AN108	10.8	13273	3890	935	4.16	60Hz	变频工况 Inverter Condition	208.5	8.2	9.7
A	ATz-AA098	9.8	12078	3540	870	4.07	60Hz	变频工况 Inverter Condition	207	8.2	12.87
	ATz-AA108	10.8	13402	3928	900	4.36	60Hz	变频工况 Inverter Condition	207	8.2	12.87
M	ATz-SM141	14.1	17094	5010	1205	4.16	60Hz	变频工况 Inverter Condition	235	8.2	12.20
	ATz-SM151	15.1	18357	5380	1295	4.15	60Hz	变频工况 Inverter Condition	235	8.2	12.87
B	ATz-SB238	23.8	29684	8700	2050	4.24	60Hz	国标高能效工况 GB Hi-efficiency Working Condition	273.4	9.7	16.2
D	QXAS-D23z-D	23.1	24396	7150	2550	2.80	60Hz	ASARE/T	297.5	9.7	16.2
	QXAS-D25z-A	25.0	26545	7780	2590	3.00	60Hz	ASARE/T	297.5	9.7	16.2
	QXAS-D25z-H	25.0	26545	7780	2650	2.94	60Hz	ASARE/T	297.5	9.7	16.2
	QXAS-D32z-A	32.1	41729	12230	4023	3.04	60Hz	ASARE/T	318	9.7	16.2
	QXAS-D388z	38.8	45414	13310	3270	4.07	60Hz	国标高能效工况 GB Hi-efficiency Working Condition	358.5	12.2	16.2
F	ATz-SF420	42.0	47427	13900	4600	3.02	60Hz	ASARE/T	342	12.2	16.2
	QXAS-F428z	42.8	46062	13500	4580	2.95	60Hz	ASARE/T	309.5	12.2	16.2
	QXAS-F65z	65.0	78135	22900	6000	3.82	60Hz	国标高能效工况 GB Hi-efficiency Working Condition	371.5	16.2	19.3

备注：型号带“※”,代表开发中。“▲”代表推荐机型。
Note: A model with “※” is under development.
A model with “▲” is the recommended model.

R32/R410A T1 DC Inverter

系列 Series	压缩机型号 Model	排量 Displ.(cc)	冷量 Capacity (Btu/h)	制冷量 Refrigerating Capacity (W)	功率 Power (W)	COP (W/W)	测试频率 Test Frequency(Hz)	测试工况 Test Conditions	压缩机高度 Compressor Height (mm)	排气管内径 Discharge Pipe ID (mm)	回气管内径 Suction Pipe ID (mm)
U	※QXF-U075z	7.5	8564	2510	580	4.33	60Hz	国标高能效工况 GB Hi-efficiency Working Condition	197	8.2	9.70
N	FTz-AN075-A	7.5	9212	2700	641	4.21	60Hz	国标高能效工况 GB Hi-efficiency Working Condition	197	8.2	9.70
	FTz-AN088-A	8.8	10697	3135	755	4.15	60Hz	国标高能效工况 GB Hi-efficiency Working Condition	197	8.2	9.70
	FTz-AN108	10.8	13307	3900	960	4.06	60Hz	国标高能效工况 GB Hi-efficiency Working Condition	211.5	8.2	9.20
	FTz-SN150	15.0	18357	5380	1318	4.08	60Hz	国标高能效工况 GB Hi-efficiency Working Condition	255	8.2	12.87
A	※QXF-A082z	8.2	9854	2888	758	3.81	60Hz	国标高能效工况 GB Hi-efficiency Working Condition	211.5	8.2	9.70
	※QXF-A082z-A	8.2	10196	2988	745	4.01	60Hz	国标高能效工况 GB Hi-efficiency Working Condition	211.5	8.2	9.70
	※QXF-A098z	9.8	10395	3465	845	4.10	60Hz	国标高能效工况 GB Hi-efficiency Working Condition	276	8.2	9.70
	※QXF-A103z	10.3	12096	3545	928	3.82	60Hz	国标高能效工况 GB Hi-efficiency Working Condition	276	8.2	9.70
	※QXF-A103z-B	10.3	12317	3610	880	4.10	60Hz	国标高能效工况 GB Hi-efficiency Working Condition	276	8.2	9.70
	QXF-A120z-A	12.0	14044	4116	1096	3.76	60Hz	国标高能效工况 GB Hi-efficiency Working Condition	228	9.7	12.20
	QXF-A139z-A	13.9	16480	4830	1295	3.73	60Hz	国标高能效工况 GB Hi-efficiency Working Condition	228	9.7	12.20
M	FTz-AM102-B	10.2	12860	3769	898	4.20	60Hz	国标高能效工况 GB Hi-efficiency Working Condition	198	8.2	12.87
	※FTz-AM142	14.2	17708	5190	1236	4.20	60Hz	国标高能效工况 GB Hi-efficiency Working Condition	215	8.2	12.87
	FTz-SM141-C	14.1	17009	4985	1235	4.04	60Hz	国标高能效工况 GB Hi-efficiency Working Condition	264	8.2	12.87
	FTz-SM151-C	15.1	18159	5322	1345	3.96	60Hz	国标高能效工况 GB Hi-efficiency Working Condition	235	8.2	12.87
	※QXFS-M180z	18.0	20881	6120	1515	4.04	60Hz	国标高能效工况 GB Hi-efficiency Working Condition	235	9.2	12.20
B	※QXF-B098z	9.8	11881	3482	828	4.21	60Hz	国标高能效工况 GB Hi-efficiency Working Condition	212	8.2	12.87
	※QXF-B103z-C	10.3	12401	3635	854	4.26	60Hz	国标高能效工况 GB Hi-efficiency Working Condition	212	8.2	9.70
	※QXF-B103z-G	10.3	12259	3593	864	4.16	60Hz	国标高能效工况 GB Hi-efficiency Working Condition	212	8.2	9.70
	※QXF-B138z-A	13.8	16959	4970	1224	4.06	60Hz	国标高能效工况 GB Hi-efficiency Working Condition	226	9.7	12.20
	※QXF-B138z-C	13.8	16619	4871	1241	3.93	60Hz	国标高能效工况 GB Hi-efficiency Working Condition	226	9.2	12.20
	※QXFS-B181z	18.1	21376	6265	1610	3.89	60Hz	国标高能效工况 GB Hi-efficiency Working Condition	250.9	9.7	12.20
	※QXFS-B212z	21.2	25921	7597	1879	4.04	60Hz	国标高能效工况 GB Hi-efficiency Working Condition	256.1	8.2	12.20
	FTz-SB238-A	23.8	29165	8548	2145	3.99	60Hz	国标高能效工况 GB Hi-efficiency Working Condition	273.4	9.7	16.20
D	QXFS-D25z-K	25.0	30162	8840	2260	3.91	60Hz	国标高能效工况 GB Hi-efficiency Working Condition	306.5	9.7	16.20
	※QXFS-D280z	28.0	33949	9950	2510	3.96	60Hz	国标高能效工况 GB Hi-efficiency Working Condition	318	9.7	16.20
	※QXFS-D388z	38.8	47085	13800	3260	4.23	60Hz	国标高能效工况 GB Hi-efficiency Working Condition	353.5	12.20	16.20
	※FTz-SD420	42.0	51862	15200	3710	4.10	60Hz	国标高能效工况 GB Hi-efficiency Working Condition	330	9.7	16.20
H	QXFS-H80z-K	80.1	95368	27950	7200	3.88	60Hz	国标高能效工况 GB Hi-efficiency Working Condition	532.7	16.2	22.40

备注：型号带“※”,代表开发中。“▲”代表推荐机型。
Note: A model with “※” is under development.
A model with “▲” is the recommended model.

②通用压缩机 Compressor for General-Purpose

R410A T1 [1φ]220-240V 50Hz

系列 Series	压缩机型号 Model	排量 Displ.(cc)	冷量 Capacity (Btu/h)	制冷量 Refrigerating Capacity (W)	功率 Power (W)	COP (W/W)	电容 Capacitor(μF)	测试工况 Test Conditions	压缩机高度 Compressor Height (mm)	排气管内径 Discharge Pipe ID (mm)	回气管内径 Suction Pipe ID (mm)
G	QXA-G050	5.0	3891	1140	479	2.38	15μf/450V	ASHRAE/T	188.0	6.2	9.7
N	QXA-N043	4.3	3362	985	365	2.71	12μf/450V	ASHRAE/T	185.0	8.2	9.2
	QXA-N050	5.0	4027	1180	435	2.71	15μf/450V	ASHRAE/T	213.0	8.2	9.7
	QXA-N066	6.6	5341	1565	570	2.75	20μf/450V	ASHRAE/T	205.0	8.2	9.2
	※QXA-N081	8.1	6655	1950	722	2.70	25μf/450V	ASHRAE/T	208.5	8.2	9.2
A	QXA-A044	4.4	3567	1045	370	2.82	15μf/450V	ASHRAE/T	199.0	8.2	9.7
	QXA-A058	5.8	4640	1360	490	2.78	20μf/450V	ASHRAE/T	206.0	8.2	9.7
	QXA-A066	6.6	5392	1580	565	2.80	20μf/450V	ASHRAE/T	209.0	8.2	9.7
	QXA-A069	7.0	5637	1652	592	2.79	20μf/450V	ASHRAE/T	215.0	8.2	9.7
	QXA-A071	7.1	5664	1660	615	2.70	25μf/450V	ASHRAE/T	215.0	6.2	9.7
	QXA-A081	8.1	6653	1950	685	2.85	40μf/450V	ASHRAE/T	219.0	6.2	9.7
	QXA-A083	8.3	6619	1940	710	2.73	35μf/450V	ASHRAE/T	219.0	6.2	9.7
	QXA-A086	8.6	7233	2120	831	2.55	20μf/450V	ASHRAE/T	213.0	8.2	9.7
	QXA-A088	8.8	7233	2120	740	2.86	35μf/450V	ASHRAE/T	224.0	6.2	9.7
	QXA-A078U	7.8	7233	1915	790	2.42	35μf/450V	ASHRAE/T	219.0	8.2	9.7
	QXA-A088U	8.8	7452	2184	897	2.43	40μf/450V	ASHRAE/T	224.0	6.2	9.7
B	QXA-B092	9.2	7657	2244	736	3.05	30μf/450V	ASHRAE/T	266.5	9.7	12.2
	QXA-B098	9.8	8052	2360	774	3.05	25uF/450V	ASHRAE/T	266.5	9.7	12.2
	QXA-B098(J)	9.8	8052	2360	787	3.00	30uF/450V	ASHRAE/T	266.5	9.7	12.2
	QAA-B100	10.0	8359	2450	816	3.00	30μf/450V	ASHRAE/T	260.5	8.2	9.7
	QXA-B102	10.2	8527	2499	819	3.05	25uF/450V	ASHRAE/T	266.5	9.7	12.2
	QXA-B104	10.4	8632	2530	830	3.05	30uF/450V	ASHRAE/T	266.5	9.7	12.2
	QXA-B104(J)	10.4	8632	2530	843	3.00	30uF/450V	ASHRAE/T	266.5	9.7	12.2
	QXA-B104U	10.4	8769	2570	895	2.87	30μf/450V	ASHRAE/T	271.5	8.2	9.2
	QXA-B106	10.6	8666	2540	828	3.07	25μf/450V	ASHRAE/T	266.5	9.7	12.2
	QXA-B109	11.0	9014	2642	870	3.04	30uF/450V	ASHRAE/T	266.5	9.7	12.2
	QXA-B109(J)	11.0	9014	2642	881	3.00	30uF/450V	ASHRAE/T	266.5	9.7	12.2
	QXA-B115	11.5	9588	2810	918	3.06	30uF/450V	ASHRAE/T	266.5	9.7	12.2
	QXA-B117	11.7	9827	2880	950	3.03	30uF/450V	ASHRAE/T	266.5	9.7	12.2
	QXA-B120	12.0	10023	2938	963	3.05	35uF/450V	ASHRAE/T	266.5	9.7	12.2

备注：型号带“※”,代表开发中。“▲”代表推荐机型。
Note: A model with “※” is under development.
A model with “▲” is the recommended model.

产品介绍 Product Introduction

通用 General-Purpose

R410A T1 [1φ]220-240V 50Hz

系列 Series	压缩机型号 Model	排量 Displ.(cc)	冷量 Capacity (Btu/h)	制冷量 Refrigerating Capacity (W)	功率 Power (W)	COP (W/W)	电容 Capacitor(μF)	测试工况 Test Conditions	压缩机高度 Compressor Height (mm)	排气管内径 Discharge Pipe ID (mm)	回气管内径 Suction Pipe ID (mm)
B	QXA-B120(J)	12.0	10023	2938	979	3.00	35uF/450V	ASHRAE/T	266.5	9.7	12.2
	QXA-B122	12.2	10502	3078	1007	3.06	35uF/450V	ASHRAE/T	266.5	8.2	12.2
	QXA-B125	12.5	10298	3020	990	3.05	35μf/450V	ASHRAE/T	266.5	9.7	12.2
	QXA-B125(J)	12.5	10298	3020	1007	3.00	35μf/450V	ASHRAE/T	266.5	9.7	12.2
	QXA-B129	12.9	10673	3130	1026	3.05	35μf/450V	ASHRAE/T	266.5	9.7	12.2
	QXA-B129(J)	12.9	10673	3130	1043	3.00	40μf/450V	ASHRAE/T	266.5	9.7	12.2
	QXA-B129A	12.9	11021	3230	1219	2.65	40μf/450V	ASHRAE/T	271.5	8.2	9.2
	QXA-B133	13.3	10912	3200	1053	3.04	35μf/450V	ASHRAE/T	266.5	9.7	12.2
	QXA-B136	13.6	10912	3264	1070	3.05	35μf/450V	ASHRAE/T	266.5	9.7	12.2
	QXA-B136(J)	13.6	10912	3264	1088	3.00	40μf/450V	ASHRAE/T	266.5	9.7	12.2
	QXA-B139	13.9	11601	3400	1122	3.03	35μf/450V	ASHRAE/T	266.5	9.7	12.2
	QXA-B139(J)	14.0	12048	3530	1250	2.82	45uF/450V	ASHRAE/T	266.5	9.7	12.2
	QXA-B15	15.0	12078	3540	1200	2.95	35μf/450V	ASHRAE/T	266.5	9.7	12.2
C	※QXA-C155	15.5	12897	3780	1223	3.09	40uF/450V	ASHRAE/T	316.4	9.7	12.2
	※QXA-C160	16.0	13307	3900	1262	3.09	40uF/450V	ASHRAE/T	316.4	9.7	12.2
	※QXA-C170	17.0	14160	4150	1347	3.08	40uF/450V	ASHRAE/T	316.4	9.7	16.2
	※QXA-C175	17.5	14603	4280	1390	3.08	40uF/450V	ASHRAE/T	316.4	9.7	16.2
	※QXA-C184	18.4	15354	4500	1461	3.08	45uF/450V	ASHRAE/T	316.4	9.7	16.2
	※QXA-C190	19.0	15883	4655	1521	3.06	45uF/450V	ASHRAE/T	316.4	9.7	16.2
	※QXA-C193	19.3	16139	4730	1546	3.06	45uF/450V	ASHRAE/T	316.4	9.7	16.2
D	※QXA-D145	14.5	11992	3515	1123	3.13	45uF/450V	ASHRAE/T	307.5	9.7	16.2
	※QXA-D160	16.0	13233	3878	1239	3.13	45uF/450V	ASHRAE/T	307.5	9.7	16.2
	QXA-D184	18.4	15218	4460	1439	3.10	50uF/450V	ASHRAE/T	307.5	9.7	16.2
	QXA-D19	19.0	15695	4600	1484	3.10	50uF/450V	ASHRAE/T	307.5	9.7	16.2
	QXA-D193	19.3	15968	4680	1519	3.08	45uF/450V	ASHRAE/T	307.5	9.7	16.2
	QXA-D20	20.0	16548	4850	1590	3.05	50uF/450V	ASHRAE/T	307.5	9.7	16.2
	※QXA-D205	20.5	17302	5071	1687	3.01	50uF/450V	ASHRAE/T	307.5	9.7	16.2
	QXA-D21	21.0	17725	5195	1728	3.01	50uF/450V	ASHRAE/T	307.5	9.7	16.2
	※QXA-D215	21.5	18148	5319	1769	3.01	50uF/450V	ASHRAE/T	307.5	9.7	16.2
	※QXA-D22	22.0	18882	5534	1833	3.02	50uF/450V	ASHRAE/T	307.5	9.7	16.2

备注：型号带“※”,代表开发中。“▲”代表推荐机型。
Note: A model with “※” is under development.
A model with “▲” is the recommended model.

②通用压缩机 Compressor for General-Purpose

R410A T1 [1φ]220-240V 50Hz

系列 Series	压缩机型号 Model	排量 Displ.(cc)	冷量 Capacity (Btu/h)	制冷量 Refrigerating Capacity (W)	功率 Power (W)	COP (W/W)	电容 Capacitor(μF)	测试工况 Test Conditions	压缩机高度 Compressor Height (mm)	排气管内径 Discharge Pipe ID (mm)	回气管内径 Suction Pipe ID (mm)
D	QXA-D225	22.5	17915	5660	1875	3.02	50uF/450V	ASHRAE/T	307.5	9.7	16.2
	QXA-D232	23.2	19912	5836	1945	3.00	60uF/450V	ASHRAE/T	307.5	9.7	16.2
	QXA=D24	24.0	20656	6054	2014	3.01	60uF/450V	ASHRAE/T	307.5	9.7	16.2
	※QXA-D245	24.5	21028	6163	2054	3.00	60uF/450V	ASHRAE/T	307.5	9.7	16.2
E	QXA-E20	20.0	17105	5013	1607	3.12	55uF/450V	ASHRAE/T	317.5	9.7	16.2
	QXA-E21	21.0	17915	5251	1683	3.12	55uF/450V	ASHRAE/T	317.5	9.7	12.2
	QXA-E22	22.0	18630	5460	1761	3.10	55uF/450V	ASHRAE/T	321.5	9.7	16.2
	QXA-E232	23.2	19924	5840	1878	3.11	60uF/450V	ASHRAE/T	312.5	9.7	16.2
	QXA-E24	24.0	20742	6079	1955	3.11	60uF/450V	ASHRAE/T	321.5	9.7	16.2
	QXA-E25	25.0	21591	6328	2035	3.11	60uF/450V	ASHRAE/T	331.5	9.7	16.2
	QXA-E265	26.5	22860	6700	2160	3.1	60uF/450V	ASHRAE/T	337.5	9.7	16.2
	QXA-E27	27.0	22758	6670	2152	3.10	60uF/450V	ASHRAE/T	337.5	9.7	16.2
	QXA-E275	27.5	23179	6794	2191	3.10	60uF/450V	ASHRAE/T	337.5	9.7	16.2
	QXA-E280	28.0	23601	6917	2231	3.10	60uF/450V	ASHRAE/T	337.5	9.7	16.2
	QXA-E290	29.0	24444	7164	2311	3.10	60uF/450V	ASHRAE/T	337.5	9.7	16.2
	QXA-E295	29.5	24865	7288	2351	3.10	60uF/450V	ASHRAE/T	337.5	9.7	16.2
	QXA-E305	30.5	25708	7535	2431	3.10	60uF/450V	ASHRAE/T	337.5	9.7	16.2
SE	QXAS-E265	26.5	22772	6674	2188	3.05	60uF/450V	ASHRAE/T	378	9.7	16.2
	QXAS-E270	27.0	23202	6800	2230	3.05	60uF/450V	ASHRAE/T	378	9.7	16.2
	QXAS-E275	27.5	23631	6926	2271	3.05	60uF/450V	ASHRAE/T	378	9.7	16.2
	QXAS-E280	28.0	24055	7050	2310	3.05	60uF/450V	ASHRAE/T	378	9.7	16.2
	QXAS-E290	29.0	24908	7300	2393	3.05	60uF/450V	ASHRAE/T	378	9.7	16.2
	QXAS-E295	29.5	25350	7430	2436	3.05	60uF/450V	ASHRAE/T	378	9.7	16.2
	QXAS-E305	30.5	26209	7681	2519	3.05	60uF/450V	ASHRAE/T	378	9.7	16.2
SF	QXAS-F275	27.5	23236	6810	2270	3.00	60uF/450V	ASHRAE/T	332.2	9.7	15.6
	QXAS-F278	27.8	23509	6890	2280	3.02	50uF/450V	ASHRAE/T	377.2	9.7	16.2
	QXAS-F286	28.6	24191	7090	2348	3.02	50uF/450V	ASHRAE/T	377.2	9.7	16.2
	QXAS-F305	30.5	25806	7563	2508	3.02	50uF/450V	ASHRAE/T	367.2	9.7	16.2
	QXAS-F325	32.5	27842	8160	2706	3.02	50uF/450V	ASHRAE/T	367.2	9.7	16.2
	QXAS-F356	35.6	30765	9017	2939	3.07	60uF/450V	ASHRAE/T	367.2	9.7	16.2
	QXAS-F41	41.0	35144	10300	3433	3.00	80uF/450V	ASHRAE/T	380.2	9.7	16.2

备注：型号带“※”,代表开发中。“▲”代表推荐机型。
Note: A model with “※” is under development.
A model with “▲” is the recommended model.

产品介绍 Product Introduction

通用 General-Purpose

R410A T1 [1φ]208-230V 60Hz

系列 Series	压缩机型号 Model	排量 Displ.(cc)	冷量 Capacity (Btu/h)	制冷量 Refrigerating Capacity (W)	功率 Power (W)	COP (W/W)	电容 Capacitor(μF)	测试工况 Test Conditions	压缩机高度 Compressor Height (mm)	排气管内径 Discharge Pipe ID (mm)	回气管内径 Suction Pipe ID (mm)
N	QXA-N058r	5.8	7317	2144	497	4.31	15uF/450V	北美高能效工况 Hi-energy efficiency Condition for North America	190.0	8.2	9.7
A	QXA-A047r	4.7	4710	1380	476	2.90	15uF/450V	ASHRAE/T	206.0	8.2	9.7
	QXA-A053r	5.3	5290	1550	535	2.90	20uF/450V	ASHRAE/T	206.0	8.2	9.7
	QXA-A056r	5.6	5597	1640	560	2.93	15uF/450V	ASHRAE/T	209.0	8.2	9.7
	QXA-A062r	6.2	6159	1805	616	2.93	15uF/450V	ASHRAE/T	209.0	8.2	9.7
	QXA-A066r	6.6	6510	1908	651	2.93	15uF/450V	ASHRAE/T	215.0	8.2	9.7
	QXA-A069r	6.9	6858	2010	686	2.93	20uF/450V	ASHRAE/T	215.0	8.2	9.7
	QXA-A078r	7.8	7711	2260	770	2.94	20uF/450V	ASHRAE/T	219.0	8.2	9.7
	QXA-A081r	8.1	8052	2360	805	2.93	20uF/450V	ASHRAE/T	219.0	8.2	9.7
	QXA-A083r	8.3	8345	2445	844	2.90	25uF/450V	ASHRAE/T	219.0	8.2	9.7
	QXA-A086r	8.6	8669	2540	875	2.90	25uF/450V	ASHRAE/T	219.0	8.2	9.7
B	QXA-B084r	8.4	8362	2450	825	2.97	25uF/450V	ASHRAE/T	261.5	9.7	12.2
	QXA-B088r	8.8	8703	2550	840	3.04	25uF/450V	ASHRAE/T	266.5	9.7	12.2
	QXA-B092r	9.2	9119	2672	874	3.06	25uF/450V	ASHRAE/T	266.5	9.7	12.2
	QXA-B102r	10.2	10225	2997	974	3.08	30uF/450V	ASHRAE/T	266.5	9.7	12.2
	QXA-B106r	10.6	10580	3101	1007	3.08	25uF/450V	ASHRAE/T	266.5	9.7	12.2
	QXA-B109r	10.9	10893	3193	1037	3.08	25uF/450V	ASHRAE/T	266.5	9.7	12.2
	*QXA-B109rU	10.9	11123	3260	1160	2.81	30uF/450V	ASHRAE/T	266.5	9.7	12.2
	QXA-B112r	11.2	11174	3275	1074	3.05	30uF/450V	ASHRAE/T	266.5	9.7	12.2
	QXA-B115r	11.5	11659	3417	1121	3.05	30uF/450V	ASHRAE/T	266.5	9.7	12.2
	QXA-B117r	11.7	11624	3407	1117	3.05	35uF/450V	ASHRAE/T	266.5	9.7	12.2
	QXA-B120r	12.0	11955	3504	1149	3.05	35uF/450V	ASHRAE/T	266.5	9.7	12.2
	QXA-B136r	13.6	14023	4110	1348	3.05	35uF/450V	ASHRAE/T	266.5	9.7	12.2
C	QXA-C145r	14.5	14876	4360	1384	3.15	40uF/450V	ASHRAE/T	316.4	9.7	12.2
	※QXA-C150r	15.0	15388	4510	1432	3.15	40uF/450V	ASHRAE/T	316.4	9.7	12.2
	QXA-C155r	15.5	15900	4660	1479	3.15	40uF/450V	ASHRAE/T	316.4	9.7	12.2
	QXA-C160r	16.0	16412	4810	1527	3.15	40uF/450V	ASHRAE/T	316.4	9.7	12.2
	※QXA-C165r	16.5	16924	4960	1575	3.15	40uF/450V	ASHRAE/T	316.4	9.7	12.2
	QXA-C170r	17.0	17435	5110	1622	3.15	40uF/450V	ASHRAE/T	316.4	9.7	16.2
	※QXA-C175r	17.5	17947	5260	1681	3.13	40uF/450V	ASHRAE/T	316.4	9.7	16.2
	QXA-C184r	18.4	18902	5540	1770	3.13	40uF/450V	ASHRAE/T	316.4	9.7	16.2
	※QXA-C190r	19.0	19517	5720	1827	3.13	45uF/450V	ASHRAE/T	316.4	9.7	16.2
	※QXA-C193r	19.3	19824	5810	1856	3.13	45uF/450V	ASHRAE/T	316.4	9.7	16.2

备注：型号带“※”,代表开发中。“▲”代表推荐机型。
Note: A model with “※” is under development.
A model with “▲” is the recommended model.

产品介绍 Product Introduction

②通用压缩机 Compressor for General-Purpose

R410A T1 [1φ]208-230V 60H

系列 Series	压缩机型号 Model	排量 Displ.(cc)	冷量 Capacity (Btu/h)	制冷量 Refrigerating Capacity (W)	功率 Power (W)	COP (W/W)	电容 Capacitor(μF)	测试工况 Test Conditions	压缩机高度 Compressor Height (mm)	排气管内径 Discharge Pipe ID (mm)	回气管内径 Suction Pipe ID (mm)
D	QXA-D145r	14.5	14634	4289	1379	3.11	40uF/450V	ASHRAE/T	307.5	9.7	16.2
	QXA-D15r	15.0	15136	4436	1427	3.11	40uF/450V	ASHRAE/T	307.5	9.7	16.2
	QXA-D155r	15.5	15760	4619	1490	3.10	40uF/450V	ASHRAE/T	307.5	9.7	16.2
	QXA-D16r	16.0	16347	4791	1541	3.11	40uF/450V	ASHRAE/T	307.5	9.7	16.2
	QXA-D165r	16.5	16914	4957	1587	3.12	40uF/450V	ASHRAE/T	307.5	9.7	12.2
	QXA-D17r	17.0	17399	5099	1634	3.12	40uF/450V	ASHRAE/T	307.5	9.7	12.2
	QXA-D175r	17.5	17906	5248	1687	3.11	40uF/450V	ASHRAE/T	307.5	9.7	12.2
	QXA-D184r	18.4	18865	5529	1780	3.11	40uF/450V	ASHRAE/T	307.5	9.7	16.2
	QXA-D19r	19.0	19270	5648	1825	3.09	45uF/450V	ASHRAE/T	307.5	9.7	16.2
	QXA-D193r	19.3	19484	5710	1848	3.09	45uF/450V	ASHRAE/T	307.50	9.70	16.20
	QXA-D20r	20.0	20336	5960	1954	3.05	35uF/450V	ASHRAE/T	307.5	9.7	16.2
	※QXA-D205r	20.5	21178	6207	2005	3.10	50uF/450V	ASHRAE/T	307.5	9.7	16.2
	※QXA-D21r	21.0	21677	6353	2051	3.10	50uF/450V	ASHRAE/T	307.5	9.7	16.2
	※QXA-D215r	21.5	22212	6510	2102	3.10	50uF/450V	ASHRAE/T	307.5	9.7	16.2
	※QXA-D22r	22.0	22709	6656	2154	3.09	50uF/450V	ASHRAE/T	307.5	9.7	16.2
	※QXA-D225r	22.5	17915	6815	2201	3.10	50uF/450V	ASHRAE/T	307.5	9.7	16.2
	※QXA-D232r	23.2	23948	7019	2272	3.09	60uF/450V	ASHRAE/T	307.5	9.7	16.2
	※QXA-D24r	24.0	24774	7261	2350	3.09	60uF/450V	ASHRAE/T	307.5	9.7	16.2
	※QXA-D245r	24.5	25290	7412	2399	3.09	60uF/450V	ASHRAE/T	307.5	9.7	16.2
E	QXA-E20r	20.0	20984	6150	1971	3.12	60uF/450V	ASHRAE/T	317.5	9.7	16.2
	QXA-E205r	20.5	21496	6300	2019	3.12	60uF/450V	ASHRAE/T	317.5	9.7	16.2
	QXA-E21r	21.0	21752	6375	2043	3.12	60uF/450V	ASHRAE/T	317.5	9.7	16.2
	QXA-E215r	21.5	22246	6520	2090	3.12	60uF/450V	ASHRAE/T	321.5	9.7	16.2
	QXA-E22r	22.0	22796	6681	2141	3.12	60uF/450V	ASHRAE/T	321.5	9.7	16.2
	QXA-E232r	23.2	24536	7191	2305	3.12	60uF/450V	ASHRAE/T	331.5	9.7	16.2
	QXA-E24r	24.0	25197	7385	2367	3.12	55uF/450V	ASHRAE/T	331.5	9.7	16.2
	QXA-E25r	25.0	25545	7487	2400	3.12	55uF/450V	ASHRAE/T	331.5	9.7	16.2
SE	※QXAS-E265r	26.5	26955	7900	2590	3.05	60uF/450V	ASHRAE/T	378	9.7	16.2
	※QXAS-E275r	27.5	27978	8200	2689	3.05	60uF/450V	ASHRAE/T	378	9.7	16.2
	QXAS-E280r	28.0	28866	8460	2774	3.05	60uF/450V	ASHRAE/T	378	9.7	16.2
SF	QXAS-F290r	29.0	30026	8800	2904	3.03	60uF/450V	ASHRAE/T	352.2	9.7	16.2
	QXAS-F295r	29.5	31253	9160	3058	3.00	45uF/450V	ASHRAE/T	377.2	9.7	16.2
	QXAS-F305r	30.5	32053	9394	3131	3.00	50uF/450V	ASHRAE/T	377.2	9.7	16.2
	QXAS-F325r	32.5	34120	10000	3333	3.00	70uF/450V	ASHRAE/T	367.2	9.7	16.2
	QXAS-F356r	35.6	37805	11080	3756	2.95	50uF/450V	ASHRAE/T	367.2	9.7	16.2

备注：型号带“※”,代表开发中。“▲”代表推荐机型。
Note: A model with “※” is under development.
A model with “▲” is the recommended model.

R410A T1 [1φ]115V 60Hz

系列 Series	压缩机型号 Model	排量 Displ.(cc)	冷量 Capacity (Btu/h)	制冷量 Refrigerating Capacity (W)	功率 Power (W)	COP (W/W)	电容 Capacitor(μF)	测试工况 Test Conditions	压缩机高度 Compressor Height (mm)	排气管内径 Discharge Pipe ID (mm)	回气管内径 Suction Pipe ID (mm)
N	QXA-N071x	7.1	6997	2050	715	2.87	50μf/250V	ASHRAE/T	227.5	8.2	9.7
	QXA-N075x	7.5	7549	2212	799	2.77	50μf/250V	ASHRAE/T	220.0	6.2	9.7
A	QXA-A046x	4.6	5783	1695	368	4.61	35μf/250V	北美高能效工况 Hi-energy efficiency Condition for North America	209.0	8.2	9.7
	QXA-A050x	5.1	6517	1910	414	4.61	45μf/250V	北美高能效工况 Hi-energy efficiency Condition for North America	209.0	8.2	9.7
	QXA-A052x	5.2	6551	1920	417	4.60	35μf/250V	北美高能效工况 Hi-energy efficiency Condition for North America	209.0	8.2	9.7
	QXA-A053x	5.3	5084	1490	530	2.81	40μf/250V	ASHRAE/T	209.0	6.2	9.7
	QXA-A058x	5.8	5545	1625	580	2.80	40μf/250V	ASHRAE/T	209.0	6.2	9.7
	QXA-A066x	6.6	8496	2490	532	4.68	50μf/250V	北美高能效工况 Hi-energy efficiency Condition for North America	215.0	8.2	9.7
	QXA-A068x	6.8	8823	2586	550	4.70	50μf/250V	北美高能效工况 Hi-energy efficiency Condition for North America	215.0	8.2	9.7
	QXA-A069x	6.9	6926	2030	711	2.86	50μf/250V	ASHRAE/T	215.0	6.2	9.7
	QXA-A071x	7.1	7029	2060	702	2.93	50μf/250V	ASHRAE/T	215.0	8.2	9.7
	QXA-A075x	7.5	7321	2145	740	2.90	50μf/250V	ASHRAE/T	219.0	8.2	9.7
	QXA-A081x	7.1	7986	2340	810	2.89	55μf/250V	ASHRAE/T	219.0	8.2	12.2
	QXA-A083x	8.3	8189	2400	830	2.89	55μf/250V	ASHRAE/T	219.0	8.2	9.7
	QXA-A086x	8.6	8564	2510	860	2.92	55μf/250V	ASHRAE/T	219.0	8.2	9.7
B	QXA-B088x	8.8	8731	2559	846	3.02	60uF/250V	ASHRAE/T	266.5	9.7	12.2
	QXA-B092x	9.2	9315	2730	903	3.02	60uF/250V	ASHRAE/T	264.0	8.2	9.7
	QXA-B095x	9.5	9434	2765	928	2.98	60uF/250V	ASHRAE/T	286.0	8.2	9.7
	QXA-B098x	9.8	9710	2846	933	3.05	45uF/250V	ASHRAE/T	266.5	9.7	12.2
	QXA-B100x	10.0	10136	2970	985	3.01	60uF/250V	ASHRAE/T	272.5	8.2	12.2
	QXA-B102x	10.2	10202	2990	971	3.08	55uF/250V	ASHRAE/T	266.5	9.7	12.2
	QXA-B104x	10.4	10390	3045	989	3.08	60uF/250V	ASHRAE/T	266.5	9.7	12.2
	QXA-B106x	10.6	10615	3111	1004	3.10	60uF/250V	ASHRAE/T	266.5	9.7	12.2
	QXA-B109x	10.9	10935	3205	1041	3.08	60uF/250V	ASHRAE/T	266.5	9.7	12.2
	QXA-B112x	11.2	11243	3295	1080	3.05	60uF/250V	ASHRAE/T	266.5	9.7	12.2
	QXA-B115x	11.5	11533	3380	1108	3.05	60uF/250V	ASHRAE/T	266.5	9.7	12.2
	QXA-B117x	11.7	11737	3440	1124	3.06	60uF/250V	ASHRAE/T	266.5	9.7	12.2
	QXA-B120x	12.0	11942	3500	1136	3.08	60uF/250V	ASHRAE/T	266.5	9.7	12.2
	QXA-B125x	12.5	12556	3680	1245	2.96	60uF/250V	ASHRAE/T	266.5	9.7	12.2
	QXA-B129x	12.9	12966	3800	1320	2.88	60uF/250V	ASHRAE/T	261.5	9.7	9.7
	QXA-B139x	14	14228	4170	1465	2.85	60uF/250V	ASHRAE/T	261.5	9.7	9.7

备注：型号带“※”,代表开发中。“▲”代表推荐机型。
Note: A model with “※” is under development.
A model with “▲” is the recommended model.

②通用压缩机 Compressor for General-Purpose

R22 T1 [1φ]220-240V 50Hz

系列 Series	压缩机型号 Model	排量 Displ.(cc)	冷量 Capacity (Btu/h)	制冷量 Refrigerating Capacity (W)	功率 Power (W)	COP (W/W)	电容 Capacitor(μF)	测试工况 Test Conditions	压缩机高度 Compressor Height (mm)	排气管内径 Discharge Pipe ID (mm)	回气管内径 Suction Pipe ID (mm)
A	QX-A081	8.1	4625	1355	475	2.85	15μF/450V	ASHRAE/T	206.0	8.2	7
	QX-A086	8.6	4845	1420	502	2.83	35μF/450V	ASHRAE/T	219.0	8.2	9.7
	QX-A104	10.4	5969	1749	601	2.91	25μF/450V	ASHRAE/T	224.0	8.2	9.7
B	QX-B139	13.9	8974	2630	619	4.25	30uF/450V	高能效工况 Hi-efficiency Working Condition	271.5	9.7	12.87
	QX-B150	15.0	9622	2820	664	4.25	30uF/450V	高能效工况 Hi-efficiency Working Condition	262.0	9.7	12.87
	QX-B155	15.5	9997	2930	681	4.30	30uF/450V	高能效工况 Hi-efficiency Working Condition	262.5	9.7	12.2
	QX-B160	16.0	10407	3050	718	4.25	25uF/450V	高能效工况 Hi-efficiency Working Condition	262.5	9.7	12.2
	QX-B160U	16.0	10065	2950	818	3.61	35μF/450V	高能效工况 Hi-efficiency Working Condition	262.5	8.2	9.7
	QX-B172	17.2	9884	2897	920	3.15	35μF/450V	ASHRAE/T	273.0	9.7	12.2
	QX-B193	19.3	12283	3600	837	4.30	30uF/450V	高能效工况 Hi-efficiency Working Condition	284.0	9.7	12.2
	QX-B202	20.2	12949	3795	883	4.30	30uF/450V	高能效工况 Hi-efficiency Working Condition	273.0	9.7	12.2
	QX-B206	20.6	13204	3870	900	4.30	30uF/450V	高能效工况 Hi-efficiency Working Condition	284.0	9.7	12.2
	QX-B210	21.0	13477	3950	908	4.35	30uF/450V	高能效工况 Hi-efficiency Working Condition	281.0	9.7	12.87
	QX-B210U	21.0	13102	3840	1120	3.43	40uF/450V	高能效工况 Hi-efficiency Working Condition	286.0	9.7	12.2
	QX-B212	21.3	13750	4030	937	4.30	40uF/450V	高能效工况 Hi-efficiency Working Condition	281.0	9.7	12.87
	QX-B217	21.7	12454	4080	949	4.30	35μF/450V	高能效工况 Hi-efficiency Working Condition	281.0	9.7	12.87
	QX-B222	22.1	12761	4160	967	4.30	35uF/450V	高能效工况 Hi-efficiency Working Condition	288.0	9.7	12.2
D	QX-D28	28.0	18152	5320	1209	4.40	50uF/450V	高能效工况 Hi-efficiency Working Condition	309.0	9.7	16.2
	QX-D287	28.7	18612	5455	1240	4.40	50uF/450V	高能效工况 Hi-efficiency Working Condition	309.0	9.7	16.2
	QX-D305	30.7	20091	5888	1338	4.40	50uF/450V	高能效工况 Hi-efficiency Working Condition	325.0	9.7	16.2
F	QX-F325	32.5	19350	5671	1746	3.25	50uF/450V	ASHRAE/T	328.0	9.7	12.87
	QX-F34	33.7	20185	5916	1810	3.27	55uF/450V	ASHRAE/T	343.0	9.7	12.87
	※QX-F36	35.6	21325	6250	1923	3.25	55uF/450V	ASHRAE/T	343.0	9.7	16.2
	QX-F37	36.8	22100	6477	1991	3.25	60uF/450V	ASHRAE/T	343.0	9.7	16.2
SF	※QXS-F40A	40.0	26464	7756	1825	4.25	50uF/450V	高能效工况 Hi-efficiency Working Condition	393.2	9.7	16.2
	QXS-F41A	41.0	27125	7950	1870	4.25	50uF/450V	高能效工况 Hi-efficiency Working Condition	393.2	9.7	16.2
	QXS-F42A	42.0	27787	8144	1916	4.25	50uF/450V	高能效工况 Hi-efficiency Working Condition	393.2	9.7	16.2
	QXS-F428A	42.8	28320	8300	1953	4.25	50uF/450V	高能效工况 Hi-efficiency Working Condition	393.2	9.7	16.2
	※QXS-F438A	43.8	25829	7570	2366	3.20	50uF/450V	ASHRAE/T	393.2	9.7	16.2
	QXS-F475	47.5	28319.6	8300	2677	3.10	60uF/450V	ASHRAE/T	397.0	9.7	16.2

备注：型号带“※”,代表开发中。“▲”代表推荐机型。
Note: A model with “※” is under development.
A model with “▲” is the recommended model.

R22 T1 [3φ]380V 50Hz

系列 Series	压缩机型号 Model	排量 Displ.(cc)	冷量 Capacity (Btu/h)	制冷量 Refrigerating Capacity (W)	功率 Power (W)	COP (W/W)	电容 Capacitor(μF)	测试工况 Test Conditions	压缩机高度 Compressor Height (mm)	排气管内径 Discharge Pipe ID (mm)	回气管内径 Suction Pipe ID (mm)
F	QX-F34s	33.7	19687	5770	1792	3.22	/	ASHRAE/T	343.0	9.7	16.2
SF	QXS-F41s	41.0	23815	6980	2148	3.25	/	ASHRAE/T	393.0	9.7	16.2
	QXS-F42s	42.0	24396	7150	2200	3.25	/	ASHRAE/T	393.0	9.7	16.2
	QXS-F438s	43.8	25590	7500	2336	3.21	/	ASHRAE/T	397.2	9.7	16.2
	QXS-F475s	47.5	27654	8105	2525	3.21	/	ASHRAE/T	397.2	9.7	16.2
	※QXS-F49s	49.0	28524	8360	2604	3.21	/	ASHRAE/T	403.0	9.7	16.2

R22 T1 [1φ]208-230V 60Hz

系列 Series	压缩机型号 Model	排量 Displ.(cc)	冷量 Capacity (Btu/h)	制冷量 Refrigerating Capacity (W)	功率 Power (W)	COP (W/W)	电容 Capacitor(μF)	测试工况 Test Conditions	压缩机高度 Compressor Height (mm)	排气管内径 Discharge Pipe ID (mm)	回气管内径 Sucition Pipe ID (mm)
A	QX-A098r	9.8	6752	1979	649	3.05	25uF/450V	ASHRAE/T	224.0	6.2	9.7
D	QX-D253r	25.3	17888	5243	1616	3.24	35uF/450V	ASHRAE/T	300.5	9.7	12.2
	QX-D267r	26.7	19072	5590	1717	3.26	35uF/450V	ASHRAE/T	300.5	9.7	16.2
	QX-D273r	27.3	19803	5804	1775	3.27	45uF/450V	ASHRAE/T	300.5	9.7	12.87
F	QX-F286r	28.6	20472	6000	1846	3.25	50uF/450V	ASHRAE/T	326.5	9.7	12.2
	QX-F305r	30.6	22691	6650	1992	3.34	45uF/450V	ASHRAE/T	326.5	9.7	16.2
	QX-F325r	32.5	24061	7052	2112	3.34	50uF/450V	ASHRAE/T	339.0	9.7	16.2
	QX-F34r	33.7	25058	7344	2200	3.34	50uF/450V	ASHRAE/T	343.0	9.7	16.2

R22 T1 [1φ]127V 60Hz

系列 Series	压缩机型号 Model	排量 Displ.(cc)	冷量 Capacity (Btu/h)	制冷量 Refrigerating Capacity (W)	功率 Power (W)	COP (W/W)	电容 Capacitor(μF)	测试工况 Test Conditions	压缩机高度 Compressor Height (mm)	排气管内径 Discharge Pipe ID (mm)	回气管内径 Sucition Pipe ID (mm)
A	QX-A075v	7.5	5151	1510	518	2.91	40uF/250V	ASHRAE/T	211.0	6.2	9.7
	QX-A098v	9.8	6873	2015	692	2.91	40uF/250V	ASHRAE/T	215.0	6.2	9.7

备注：型号带“※”,代表开发中。“▲”代表推荐机型。
Note: A model with “※” is under development.
A model with “▲” is the recommended model.

③T3中东向压缩机 T3 Compressor for Middle East Market

产品特点 Product Features

A 高可靠性设计 High reliability

- 可在高压比、高压差下可靠运行
Run steadily under high pressure ratio and high pressure difference environment.

- 适用于54°的环境温度，在热带沙漠气候地区，可靠运行
Applicable to the ambient temperature of 54 degrees centigrade, and can perfectly adapt to the tropical desert areas.

- 在较高的蒸发温度下长期可靠运行，满足中东室内环境温度29°下的长期可靠运行
Long-term and reliable operation at indoor temperature of 29 degrees centigrade in the Middle East areas.

B 高能效设计 High Energy efficiency

•成功应用于中东地区2015年新能效标准的空调系统中，满足分体空调能效T1工况可达3.37，T3工况下2.43
The compressor has been applied to the AC systems under 2015 New Energy Efficiency Standard in the Middle East, the COP of Split ACs can reach 3.37 and 2.43 respectively under T1 and T3 working conditions.

压缩机型谱 Product Spectrum

T3中东向压缩机 T3 Compressor for Middle East Market

产品类别 Product Category		压缩机能力范围 Capacity Range								
冷媒 Refrigerant	电压/频率 Voltage V/ Frequency	BTU/h	6824	10236	13648	17060	20472	23884	27296	30708
		W	2000	3000	4000	5000	6000	7000	8000	9000
R410A	220-240V/50Hz	(8000-25000 BTU/h)								
	208-230V/60Hz	(10000-30000 BTU/h)								
R22	220-240V/50Hz	(10000-30000 BTU/h)								
R32	220-240V/50Hz	(9000-23000 BTU/h)								

③T3中东向压缩机 T3 Compressor for Middle East Market

压缩机产品规格 Compressor Spec.

R410A T3 [1φ]220-240V 50Hz

系列 Series	压缩机型号 Model	排量 Displ.(cc)	冷量 Capacity (Btu/h)	制冷量 Refrigerating Capacity (W)	功率 Power (W)	COP (W/W)	电容 Capacitor(μF)	测试工况 Test Conditions	压缩机高度 Compressor Height (mm)	排气管内径 Discharge Pipe ID (mm)	回气管内径 Suction Pipe ID (mm)
B	QXAH-B098	9.8	8052	2360	787	3	25uF/450V	ASHRAE/T	266.5	9.7	12.2
	QXAH-B120	12	9929	2910	970	3	30uF/450V	ASHRAE/T	266.5	9.7	12.2
C	※QXAH-C184	18.4	15354	4500	1461	3.08	45uF/450V	ASHRAE/T	316.4	9.7	16.2
	※QXAH-C190	19.0	15883	4655	1521	3.06	45uF/450V	ASHRAE/T	316.4	9.7	16.2
D	QXA-D184	18.4	15218	4460	1439	3.10	45uF/450V	ASHRAE/T	307.5	9.7	16.2
	QXAH-D19	19.0	15866	4650	1510	3.08	45uF/450V	ASHRAE/T	307.5	9.7	16.2
E	QXA-E20	20.0	16992	4980	1606	3.10	50uF/450V	ASHRAE/T	317.5	9.7	16.2
	QXAH-E21	21.0	17913	5250	1694	3.10	55uF/450V	ASHRAE/T	312.5	9.7	12.2
	QXA-E232	23.2	19448	5700	1839	3.10	60uF/450V	ASHRAE/T	331.5	9.7	16.2
	QXAH-E25	25.0	21496	6300	2066	3.05	60uF/450V	ASHRAE/T	331.5	9.7	16.2
	QXAH-E265	26.5	22519	6600	2180	3.05	60uF/450V	ASHRAE/T	337.5	9.7	16.2
	QXAH-E270	27.0	22944	6725	2205	3.05	60uF/450V	ASHRAE/T	337.5	9.7	16.2
	QXAH-E275	27.5	23369	6849	2246	3.05	60uF/450V	ASHRAE/T	337.5	9.7	16.2
	QXAH-E280	28.0	23794	6974	2286	3.05	60uF/450V	ASHRAE/T	337.5	9.7	16.2
	QXAH-E290	29.0	24644	7223	2368	3.05	60uF/450V	ASHRAE/T	337.5	9.7	16.2
	QXAH-E295	29.5	25069	7347	2409	3.05	60uF/450V	ASHRAE/T	337.5	9.7	16.2
	QXAH-E305	30.5	25918	7596	2491	3.05	60uF/450V	ASHRAE/T	337.5	9.7	16.2
SE	QXAS-E265	26.5	22772	6674	2188	3.05	60uF/450V	ASHRAE/T	378	9.7	16.2
	QXAS-E270	27.0	23202	6800	2230	3.05	60uF/450V	ASHRAE/T	378	9.7	16.2
	QXAS-E275	27.5	23631	6926	2271	3.05	60uF/450V	ASHRAE/T	378	9.7	16.2
	QXAS-E280	28.0	24055	7050	2310	3.05	60uF/450V	ASHRAE/T	378	9.7	16.2
	QXAS-E290	29.0	24908	7300	2393	3.05	60uF/450V	ASHRAE/T	378	9.7	16.2
	QXAS-E295	29.5	25350	7430	2436	3.05	60uF/450V	ASHRAE/T	378	9.7	16.2
	QXAS-E305	30.5	26209	7681	2519	3.05	60uF/450V	ASHRAE/T	378	9.7	16.2
SF	QXASH-F295	29.5	24839	7280	2459	2.96	50uF/450V	ASHRAE/T	366.2	9.7	16.2

备注：型号带“※”,代表开发中。“▲”代表推荐机型。
Note: A model with “※” is under development.
A model with “▲” is the recommended model.

③T3中东向压缩机 T3 Compressor for Middle East Market

R410A T3 [1φ]208-230V 60Hz

系列 Series	压缩机型号 Model	排量 Displ.(cc)	冷量 Capacity (Btu/h)	制冷量 Refrigerating Capacity (W)	功率 Power (W)	COP (W/W)	电容 Capacitor(μF)	测试工况 Test Conditions	压缩机高度 Compressor Height (mm)	排气管内径 Discharge Pipe ID (mm)	回气管内径 Suction Pipe ID (mm)
B	QXAH-B102r	10.2	10185	2985	963	3.10	25uF/450V	ASHRAE/T	266.5	9.7	12.2
C	QXAH-C145r	14.5	14876	4360	1384	3.15	40uF/450V	ASHRAE/T	316.4	9.7	12.2
	※QXAH-C150r	15.0	15388	4510	1432	3.15	40uF/450V	ASHRAE/T	316.4	9.7	12.2
	QXAH-C155r	15.5	15900	4660	1479	3.15	40uF/450V	ASHRAE/T	316.4	9.7	12.2
	QXAH-C160r	16.0	16412	4810	1527	3.15	40uF/450V	ASHRAE/T	316.4	9.7	12.2
	※QXAH-C165r	16.5	16924	4960	1575	3.15	40uF/450V	ASHRAE/T	316.4	9.7	12.2
	QXAH-C170r	17.0	17435	5110	1622	3.15	40uF/450V	ASHRAE/T	316.4	9.7	16.2
	※QXAH-C175r	17.5	17947	5260	1681	3.13	40uF/450V	ASHRAE/T	316.4	9.7	16.2
	QXAH-C184r	18.4	18902	5540	1770	3.13	40uF/450V	ASHRAE/T	316.4	9.7	16.2
	※QXAH-C190r	19.0	19517	5720	1827	3.13	45uF/450V	ASHRAE/T	316.4	9.70	16.2
	※QXAH-C193r	19.3	19824	5810	1856	3.13	45uF/450V	ASHRAE/T	316.4	9.7	16.2
D	QXAH-D145r	14.5	14634	4289	1379	3.11	40uF/450V	ASHRAE/T	307.5	9.7	16.2
	QXAH-D15r	15.0	15136	4436	1427	3.11	40uF/450V	ASHRAE/T	307.5	9.7	16.2
	QXAH-D155r	15.5	15760	4619	1490	3.10	40uF/450V	ASHRAE/T	307.5	9.7	16.2
	QXAH-D16r	16.0	16347	4791	1541	3.11	40uF/450V	ASHRAE/T	307.5	9.7	16.2
	QXAH-D17r	17.0	17399	5099	1634	3.12	40uF/450V	ASHRAE/T	307.5	9.7	12.2
	QXAH-D175r	17.5	17906	5248	1687	3.11	40uF/450V	ASHRAE/T	307.5	9.7	12.2
	QXAH-D184r	18.4	18865	5529	1780	3.11	40uF/450V	ASHRAE/T	307.5	9.7	16.2
	QXAH-D19r	19.0	19270	5648	1825	3.09	45uF/450V	ASHRAE/T	307.5	9.7	16.2
	QXAH-D193r	19.3	19484	5710	1848	3.09	45uF/450V	ASHRAE/T	307.5	9.7	16.2
	QXAH-D20r	20.0	20336	5960	1954	3.05	35uF/450V	ASHRAE/T	307.5	9.7	16.2
E	QXA-E20r	20.0	20813	6100	1937	3.15	60uF/450V	ASHRAE/T	317.5	9.7	16.2
	QXA-E205r	20.5	21334	6253	1985	3.15	60uF/450V	ASHRAE/T	317.5	9.7	16.2
	QXAH-E215r	21.5	22102	6478	2056	3.15	60uF/450V	ASHRAE/T	321.5	9.7	16.2
	QXAH-E232r	23.2	23850	6990	2219	3.15	60uF/450V	ASHRAE/T	331.5	9.7	16.2
	QXA-E24r	24.0	24908	7300	2317	3.15	60uF/450V	ASHRAE/T	331.5	9.7	16.2
	QXA-E25r	25.0	25931	7600	2413	3.15	60uF/450V	ASHRAE/T	331.5	9.7	16.2
	QXA-E265r	26.5	28258	8282	2629	3.15	60uF/450V	ASHRAE/T	337.5	9.7	16.2
	QXA-E270r	27.0	28791	8438	2679	3.15	60uF/450V	ASHRAE/T	337.5	9.7	16.2
	QXA-E275r	27.5	29325	8595	2728	3.15	60uF/450V	ASHRAE/T	337.5	9.7	16.2
	QXA-E280r	28.0	29858	8751	2778	3.15	60uF/450V	ASHRAE/T	337.5	9.7	16.2

备注：型号带“※”,代表开发中。“▲”代表推荐机型。
Note: A model with “※” is under development.
A model with “▲” is the recommended model.

R410A T3 [1φ]208-230V 60Hz

系列 Series	压缩机型号 Model	排量 Displ.(cc)	冷量 Capacity (Btu/h)	制冷量 Refrigerating Capacity (W)	功率 Power (W)	COP (W/W)	电容 Capacitor(μF)	测试工况 Test Conditions	压缩机高度 Compressor Height (mm)	排气管内径 Discharge Pipe ID (mm)	回气管内径 Suction Pipe ID (mm)
E	QXA-E285r	28.5	30391	8907	2873	3.10	60uF/450V	ASHRAE/T	337.5	9.7	16.2
	QXA-E290r	29.0	30924	9063	2924	3.10	60uF/450V	ASHRAE/T	337.5	9.7	16.2
	QXA-E295r	29.5	31457	9220	2974	3.10	60uF/450V	ASHRAE/T	337.5	9.7	16.2
	QXA-E305r	30.5	32524	9532	3075	3.10	60uF/450V	ASHRAE/T	337.5	9.7	16.2
SE	QXAS-E265r	26.5	27403	8031	2659	3.02	60uF/450V	ASHRAE/T	337.5	9.7	16.2
	QXAS-E270r	27.0	27920	8183	2710	3.02	60uF/450V	ASHRAE/T	337.5	9.7	16.2
	QXAS-E275r	27.5	28437	8334	2760	3.02	60uF/450V	ASHRAE/T	337.5	9.7	16.2
	QXAS-E280r	28.0	28954	8486	2810	3.02	60uF/450V	ASHRAE/T	337.5	9.7	16.2
	QXAS-E285r	28.5	29471	8638	2860	3.02	60uF/450V	ASHRAE/T	337.5	9.7	16.2
	QXAS-E290r	29.0	29988	8789	2910	3.02	60uF/450V	ASHRAE/T	337.5	9.7	16.2
	QXAS-E295r	29.5	30505	8941	2960	3.02	60uF/450V	ASHRAE/T	337.5	9.7	16.2
	QXAS-E305r	30.5	31539	9244	3061	3.02	60uF/450V	ASHRAE/T	337.5	9.7	16.2
SF	QXASH-F275r	27.5	28490	8350	2738	3.05	60uF/450V	ASHRAE/T	364.2	9.7	16.2
	QXASH-F286r	28.6	29630	8684	2847	3.05	60uF/450V	ASHRAE/T	366.2	9.7	16.2

备注：型号带“※”,代表开发中。“▲”代表推荐机型。
Note: A model with “※” is under development.
A model with “▲” is the recommended model.

③T3中东向压缩机 T3 Compressor for Middle East Market

R32 T3 [1φ]220-240V 50Hz

系列 Series	压缩机型号 Model	排量 Displ.(cc)	冷量 Capacity (Btu/h)	制冷量 Refrigerating Capacity (W)	功率 Power (W)	COP (W/W)	电容 Capacitor(μF)	测试工况 Test Conditions	压缩机高度 Compressor Height (mm)	排气管内径 Discharge Pipe ID (mm)	回气管内径 Suction Pipe ID (mm)
B	QXFH-B092	9.2	9110	2670	659	4.05	35uF/450V	高能效工况 Hi-efficiency Working Condition	266.5	9.7	16.2
	QXFH-B117	11.7	11771	3450	854	4.04	35uF/450V	高能效工况 Hi-efficiency Working Condition	266.5	9.7	16.2
E	QXFH-E193	19.3	19201	5627	1373	4.10	45uF/450V	高能效工况 Hi-efficiency Working Condition	312.5	9.7	16.2
	QXFH-E22	22.0	21919	6424	1567	4.10	45uF/450V	高能效工况 Hi-efficiency Working Condition	321.5	9.7	16.2

R22 T3 [1φ]220-240V 50Hz

系列 Series	压缩机型号 Model	排量 Displ.(cc)	冷量 Capacity (Btu/h)	制冷量 Refrigerating Capacity (W)	功率 Power (W)	COP (W/W)	电容 Capacitor(μF)	测试工况 Test Conditions	压缩机高度 Compressor Height (mm)	排气管内径 Discharge Pipe ID (mm)	回气管内径 Suction Pipe ID (mm)
C	QXH-C222	22.2	12912	3784	1242	3.05	30uF/450V	ASHRAE/T	288.0	9.7	12.87
D	QXH-D305	30.7	17913	5250	1694	3.10	50uF/450V	ASHRAE/T	325.0	9.7	16.2
F	QXH-F34	33.7	20533	6018	1855	3.24	50uF/450V	ASHRAE/T	343.0	9.7	16.2
	QXH-F36	35.6	20934	6135	1979	3.10	55uF/450V	ASHRAE/T	328.0	9.7	15.6
SF	QXSH-F42A	42.0	25249	7400	2388	3.10	60uF/450V	ASHRAE/T	349.0	9.7	15.6
	QXSH-F438A	43.8	26272	7700	2536	3.04	60uF/450V	ASHRAE/T	349.0	9.7	15.6
	QXSH-F475	47.5	28661	8400	2800	3.00	60uF/450V	ASHRAE/T	397.0	9.7	16.2
	QXSH-F49	49.0	29791	8731	2960	2.95	70uF/450V	ASHRAE/T	397.0	9.7	16.2

T3 Middle East Market
T3中东向

④印度向压缩机 Compressor for Indian Market

产品特点 Product Features

A 高可靠性设计 High reliability

•可长期稳定运行在平均温度40℃的环境下
Work stably at an average temp. of 40 degrees centigrade for a long period.

B 高效环保 High efficiency and environmental friendly

•环保R410A产品成功应用于印度五星能效标准的产品中
R410A products are complied with the five-star energy-efficiency standards in India.

C 较强的过负荷能力 Strong overload capacity

•适应电压不稳区域
Adapt to unstable voltage regions.

压缩机型谱 Product Spectrum

印度向压缩机 Compressor for Indian Market

产品类别 Product Category		压缩机能力范围 Capacity Range					
冷媒 Refrigerant	电压/频率 Voltage V/ Frequency	BTU/h	8530	15354	18766	22178	25590
		W	2500	4500	5500	6500	7500
R22	230V/50Hz	(11000-25000 BTU/h)					
R32	230V/50Hz					(10000-22000 BTU/h)	
R410A	230V/50Hz	(10000-28000 BTU/h)					

Indian Market
印度向

④印度向压缩机 Compressor for Indian Market

压缩机产品规格 Compressor Spec.

R22 T1 [1φ]230V 50Hz

系列 Series	压缩机型号 Model	排量 Displ.(cc)	冷量 Capacity (Btu/h)	制冷量 Refrigerating Capacity (W)	功率 Power (W)	COP (W/W)	电容 Capacitor(μF)	测试工况 Test Conditions	压缩机高度 Compressor Height (mm)	排气管内径 Discharge Pipe ID (mm)	回气管内径 Suction Pipe ID (mm)
B	※QX-B193u	19.3	11089	3250	1016	3.20	30uF/250V	ASHRAE/T	281	9.7	12.87
D	QX-D28u	28.7	18152	5320	1209	4.40	45uF/450V	高能效工况 Hi-efficiency Working Condition	309	9.7	16.2
	QX-D287u	28.7	18595	5450	1239	4.40	45uF/450V	高能效工况 Hi-efficiency Working Condition	309	9.7	16.2
F	※QX-F34u	33.7	20011	5865	1810	3.24	45uF/450V	ASHRAE/T	343.0	9.7	16.2
	※QX-F36u	35.6	23270	6195	1912	3.24	45uF/450V	ASHRAE/T	343.0	9.7	16.2

R410A T1 [1φ]230V 50Hz

系列 Series	压缩机型号 Model	排量 Displ.(cc)	冷量 Capacity (Btu/h)	制冷量 Refrigerating Capacity (W)	功率 Power (W)	COP (W/W)	电容 Capacitor(μF)	测试工况 Test Conditions	压缩机高度 Compressor Height (mm)	排气管内径 Discharge Pipe ID (mm)	回气管内径 Suction Pipe ID (mm)
B	QXA-B129u	12.9	10673	3150	1016	3.10	35μF/450V	ASHRAE/T	\	\	\
C	※QXA-C184u	18.4	15354	4500	1461	3.08	45uF/450V	ASHRAE/T	316.4	9.7	16.2
	※QXA-C193u	19.3	16139	4730	1546	3.06	45uF/450V	ASHRAE/T	316.4	9.7	16.2
D	QXA-D184u	18.4	15286	4480	1436	3.12	50uF/450V	ASHRAE/T	307.5	9.7	16.2
	QXA-D193u	19.3	16016	4694	1514	3.10	45uF/450V	ASHRAE/T	307.5	9.7	16.2
E	QXA-E193u	19.3	16566	4855	1527	3.18	40uF/450V	ASHRAE/T	302.5	9.7	16.2
	QXA-E22u	22.0	18630	5460	1733	3.15	60uF/450V	ASHRAE/T	321.5	9.7	16.2
	QXA-E232u	23.2	19924	5840	1854	3.15	60uF/450V	ASHRAE/T	321.5	9.7	16.2
	QXA-E25u	25.0	21666	6350	2062	3.08	60uF/450V	ASHRAE/T	331.15	9.7	16.2

R32 T1 [1φ]230V 50Hz

系列 Series	压缩机型号 Model	排量 Displ.(cc)	冷量 Capacity (Btu/h)	制冷量 Refrigerating Capacity (W)	功率 Power (W)	COP (W/W)	电容 Capacitor(μF)	测试工况 Test Conditions	压缩机高度 Compressor Height (mm)	排气管内径 Discharge Pipe ID (mm)	回气管内径 Suction Pipe ID (mm)
B	QXF-B120u	12.0	10673	3500	858	4.08	30μF/450V	ASHRAE/T	266.5	9.7	12.87

备注：型号带“※”,代表开发中。“▲”代表推荐机型。
Note: A model with “※” is under development.
A model with “▲” is the recommended model.

⑤宽电压压缩机 Wide Voltage Compressor

产品特点 Product Features

A 运行电压范围宽广 Wide voltage range

•在135V-270V之间稳定运行
Stable operation between 135V-270V.

B 高效节能 High energy efficiency

C 稳定可靠 Stable and reliable

D 多重安全保护 Multi-safety protection

E 覆盖主流冷量、冷媒 Covering the main refrigerants

压缩机型谱 Product Spectrum

宽电压压缩机 Wide Voltage Compressor							
产品类别 Product Category		压缩机能力范围 Capacity Range					
冷媒 Refrigerant	电压/频率 Voltage V/ Frequency	BTU/h	6824	10236	13648	17060	20472
		W	2000	3000	4000	5000	6000
R410A	135-270V/50Hz	(8000-20000 BTU/h)					

压缩机产品规格 Compressor Spec.

R410A T1 [1φ]135-270V 50Hz

系列 Series	压缩机型号 Model	排量 Displ.(cc)	冷量 Capacity (Btu/h)	制冷量 Refrigerating Capacity (W)	功率 Power (W)	COP (W/W)	电容 Capacitor(μF)	测试工况 Test Conditions	压缩机高度 Compressor Height (mm)	排气管内径 Discharge Pipe ID (mm)	回气管内径 Suction Pipe ID (mm)
B	QXA-B102	10.2	8462	2480	870	2.85	35uF/450V	ASHRAE/T	268.5	8.2	9.7
	QXA-B133	13.3	11328	3320	1207	2.75	45uF/450V	ASHRAE/T	268.5	8.2	9.7
C	QXA-C129	12.9	10858	3182	1117	2.85	40uF/450V	ASHRAE/T	303.4	9.7	12.2
D	QXA-D20	20.0	17060	5000	1786	2.80	45uF/450V	ASHRAE/T	307.5	9.7	16.2
F	QXA-F193	19.3	16636	4876	1686	2.89	60uF/450V	ASHRAE/T	324.5	9.7	16.2
	QXA-F22	22.0	19002	5569	1906	2.92	60uF/450V	ASHRAE/T	337.5	9.7	16.2

备注：型号带“※”,代表开发中。“▲”代表推荐机型。
Note: A model with “※” is under development.
A model with “▲” is the recommended model.

COMPRESSOR FOR COMMERCIAL AIR CONDITIONERS
商用空调压缩机

①轻商用压缩机 Light Commercial Compressor

产品特点 Product Features

R32压缩机产品特点
Product Features of R32 Compressor

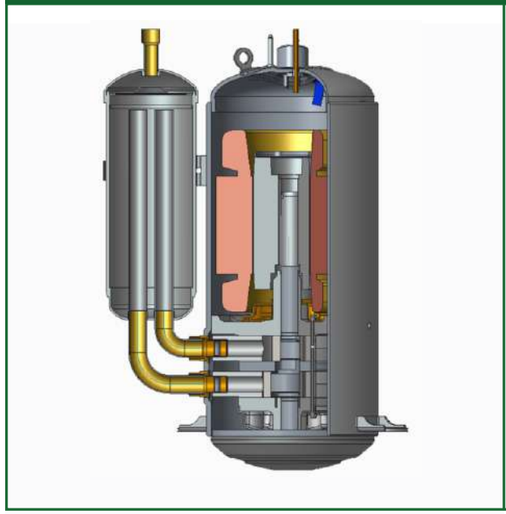

- ●高温保护装置
  High temperature protective device
- ●高分子耐高温绝缘材料
  Polymer& High-temp. insulation material
- ●新绑线材料避免高温析出
  New binding material to avoid high temp. precipitation
- ●高效电机减少发热量
  High efficiency motor reduces the heat output
- ●泵体、电机镂空散热设计
  Heat dissipation design for the pump body and motor
- ●椭球形上、下盖结构，减少90%应力
  Ellipsoidal structure, reducing stress by 90 percent
- ●5.0厚度的SS400材料，抗拉强度达510MPa
  5.0 thickness of SS400 material, the tensile strength is up to 510 Mpa
- ●无损通过20万以上4.3MPa油脉冲试验
  Pass through 200,000 4.3MPa oil pulse test

压缩机型谱 Product Spectrum

定频压缩机 Fixed speed Compressor

产品类别 Product Category		压缩机能力范围 Capacity Range						
冷媒 Refrigerant	电压/频率 Voltage V/ Frequency	BTU/h	20472	29002	37532	46062	54592	63122
		W	6000	8500	11000	13500	16000	18500
R22	380V/50Hz	(23000-50000BTU/h)						
R32	380V/50Hz	(25000-51000BTU/h)						
R410A	380V/50Hz	(23000-44000BTU/h)						
	220V/60Hz	(34000-55000BTU/h)						
	380V/60Hz	(42000-55000BTU/h)						

变频压缩机 Inverter compressor

产品类别 Product Category		压缩机能力范围 Capacity Range						
冷媒 Refrigerant	电压/频率 Voltage V/ Frequency	BTU/h	68240	76770	85300	93830	102360	110890
		W	20000	22500	25000	27500	30000	32500
R410A	DC	(70000-108000BUT/h)						

①轻商用压缩机 Light Commercial Compressor

压缩机产品规格 Compressor Spec.

R22 [3φ]380V 50Hz

系列 Series	压缩机型号 Model	排量 Displ.(cc)	冷量 Capacity (Btu/h)	制冷量 Refrigerating Capacity (W)	功率 Power (W)	COP (W/W)	电容 Capacitor(μF)	测试工况 Test Conditions	压缩机高度 Compressor Height (mm)	排气管内径 Discharge Pipe ID (mm)	回气管内径 Suction Pipe ID (mm)
SF	QXS-F415s	41.5	23,900	7,000	2,220	3.15	/	ASHRAE/T	393.2	9.7	16.2
	QXS-F42s	42.0	24,400	7,150	2,280	3.13	/	ASHRAE/T	393.2	9.7	16.2
	QXS-F438s	43.8	25,600	7,500	2,380	3.15	/	ASHRAE/T	397.2	9.7	16.2
SH	QXS-H53s	53.0	32,400	9,500	2,970	3.20	/	ASHRAE/T	382	12.87	19.3
	▲QXS-H72s	72.0	44,400	13,000	4,060	3.20	/	ASHRAE/T	406	12.87	19.3
	▲QXS-H80s	80.0	49,500	14,500	4,530	3.20	/	ASHRAE/T	406	12.87	19.3

R32 [3φ]380V 50Hz

系列 Series	压缩机型号 Model	排量 Displ.(cc)	冷量 Capacity (Btu/h)	制冷量 Refrigerating Capacity (W)	功率 Power (W)	COP (W/W)	电容 Capacitor(μF)	测试工况 Test Conditions	压缩机高度 Compressor Height (mm)	排气管内径 Discharge Pipe ID (mm)	回气管内径 Suction Pipe ID (mm)
SF	QXFS-F265s	26.5	25,900	7,580	1,850	4.10	/	高能效工况 Hi-efficiency Working Condition	378.2	9.7	16.2
	QXFS-F275s	27.5	26,900	7,870	1,910	4.12	/	高能效工况 Hi-efficiency Working Condition	367.2	9.7	16.2
	QXFS-F41s	41.0	41,000	12,000	2,960	4.05	/	高能效工况 Hi-efficiency Working Condition	380.2	9.7	16.2
SH	▲QXFS-H446s	44.6	44,400	13,000	3,130	4.15	/	高能效工况 Hi-efficiency Working Condition	367	9.7	16.2
	▲QXFS-H47s	47.0	47,100	13,800	3,410	4.05	/	高能效工况 Hi-efficiency Working Condition	382	12.87	19.3
	▲QXFS-H49s	49.0	49,100	14,400	3,470	4.15	/	高能效工况 Hi-efficiency Working Condition	382	12.87	19.3
	QXFS-H53s	53.0	53,600	15,700	3,780	4.15	/	高能效工况 Hi-efficiency Working Condition	390	12.87	19.3
	▲QXFS-H59s	59.0	60,100	17,600	4,240	4.15	/	高能效工况 Hi-efficiency Working Condition	390	12.87	19.3
	※QXFS-H64s	64.0	65,200	19,100	4,600	4.15	/	高能效工况 Hi-efficiency Working Condition	416	12.87	19.3
	※QXFS-H72s	72.0	73,700	21,600	5,200	4.15	/	高能效工况 Hi-efficiency Working Condition	416	12.87	19.3
	※QXFS-H45s	45.0	45,100	13,200	3,030	4.35	/	高能效工况 Hi-efficiency Working Condition	390	12.87	19.3
	※QXFS-H50s	50.0	50,200	14,700	3,380	4.35	/	高能效工况 Hi-efficiency Working Condition	390	12.87	19.3

备注：型号带“※”,代表开发中。“▲”代表推荐机型。
Note: A model with “※” is under development.
A model with “▲” is the recommended model.

R410A [3φ]380V 50Hz

系列 Series	压缩机型号 Model	排量 Displ.(cc)	冷量 Capacity (Btu/h)	制冷量 Refrigerating Capacity (W)	功率 Power (W)	COP (W/W)	电容 Capacitor(μF)	测试工况 Test Conditions	压缩机高度 Compressor Height (mm)	排气管内径 Discharge Pipe ID (mm)	回气管内径 Suction Pipe ID (mm)
SF	QXAS-F275s	27.5	23,000	6,730	2,170	3.10	/	ASHRAE/T	367.2	9.7	16.2
	QXAS-F286s	28.6	23,900	7,000	2,260	3.10	/	ASHRAE/T	375.2	9.7	16.2
	QXAS-F290s	29.0	24,225	7,100	2,290	3.10	/	ASHRAE/T	364.2	9.7	16.2
	QXAS-F304s	30.4	25,300	7,410	2,390	3.10	/	ASHRAE/T	367.2	9.7	16.2
	QXAS-F305s	30.5	25,365	7,434	2,413	3.08	/	ASHRAE/T	377.2	9.7	16.2
	QXAS-F356s	35.6	30,000	8,800	2,880	3.06	/	ASHRAE/T	375.2	9.7	16.2
	QXAS-F41s	41.0	35,200	10,300	3,370	3.06	/	ASHRAE/T	380.2	9.7	16.2
SH	▲QXAS-H446s	44.6	38,900	11,400	3,680	3.10	/	ASHRAE/T	367	9.7	16.2
	▲QXAS-H49s	49.0	43,000	12,600	4,060	3.10	/	ASHRAE/T	382	12.87	19.3
	QXAS-H53s	53.0	46,800	13,700	4,420	3.10	/	ASHRAE/T	390	12.87	19.3
	▲QXAS-H59s	59.0	52,600	15,400	4,970	3.10	/	ASHRAE/T	390	12.87	19.3
	▲QXAS-H64s	64.0	57,300	16,800	5,420	3.10	/	ASHRAE/T	416	12.87	19.3
	QXAS-H72s	72.0	65,200	19,100	6,160	3.10	/	ASHRAE/T	416	12.87	19.3
	※QXAS-H45s	45.0	39,200	11,500	3,530	3.26	/	ASHRAE/T	390	12.87	19.3
	※QXAS-H50s	50.0	44,000	12,900	3,960	3.26	/	ASHRAE/T	390	12.87	19.3

R410A [3φ]220V 60Hz

系列 Series	压缩机型号 Model	排量 Displ.(cc)	冷量 Capacity (Btu/h)	制冷量 Refrigerating Capacity (W)	功率 Power (W)	COP (W/W)	电容 Capacitor(μF)	测试工况 Test Conditions	压缩机高度 Compressor Height (mm)	排气管内径 Discharge Pipe ID (mm)	回气管内径 Suction Pipe ID (mm)
SF	QXAS-F325w	32.5	34,000	9,975	3,370	2.96	/	ASHRAE/T	367.2	9.7	16.2
	QXAS-F356w	35.6	36,700	10,750	3,580	3.00	/	ASHRAE/T	367.2	9.7	16.2
SH	QXAS-H40w	40.0	42,700	12,500	4,010	3.12	/	ASHRAE/T	382	12.87	19.3
	QXAS-H45w	45.0	48,800	14,300	4,580	3.12	/	ASHRAE/T	290	12.87	19.3
	QXAS-H50w	50.0	54,900	16,100	5,160	3.12	/	ASHRAE/T	382	12.87	19.3

R410A [3φ] 380V 60Hz

系列 Series	压缩机型号 Model	排量 Displ.(cc)	冷量 Capacity (Btu/h)	制冷量 Refrigerating Capacity (W)	功率 Power (W)	COP (W/W)	电容 Capacitor(μF)	测试工况 Test Conditions	压缩机高度 Compressor Height (mm)	排气管内径 Discharge Pipe ID (mm)	回气管内径 Suction Pipe ID (mm)
SH	QXAS-H40m	40.0	42,700	12500	4,010	3.12	/	ASHRAE/T	382	12.87	19.3
	QXAS-H45m	45.0	48,800	14300	4,580	3.12	/	ASHRAE/T	290	12.87	19.3
	QXAS-H50m	50.0	54,900	16100	5,160	3.12	/	ASHRAE/T	382	12.87	19.3

备注：型号带“※”,代表开发中。“▲”代表推荐机型。
Note: A model with “※” is under development.
A model with “▲” is the recommended model.

①轻商用压缩机 Light Commercial Compressor

R410A [1φ] 220V 60Hz

系列 Series	压缩机型号 Model	排量 Displ.(cc)	冷量 Capacity (Btu/h)	制冷量 Refrigerating Capacity (W)	功率 Power (W)	COP (W/W)	电容 Capacitor(μF)	测试工况 Test Conditions	压缩机高度 Compressor Height (mm)	排气管内径 Discharge Pipe ID (mm)	回气管内径 Suction Pipe ID (mm)
SH	QXAS-H40r	40.0	42,700	12,500	4,010	3.12	/	ASHRAE/T	382	12.87	19.3
	QXAS-H45r	45.0	48,800	14,300	4,580	3.12	/	ASHRAE/T	290	12.87	19.3

备注：型号带“※”,代表开发中。“▲”代表推荐机型。
Note: A model with “※” is under development.
A model with “▲” is the recommended model.

②风管机 Duct AC Compressor

压缩机型谱 Product Spectrum

宽电压压缩机 Wide Voltage Compressor													
产品类别 Product Category		压缩机能力范围 Capacity Range											
冷媒 Refrigerant	电压/频率 Voltage V/ Frequency	BTU/h	6824	10236	13648	17060	20472	23884	27296	30780	34120	37532	40944
		W	2000	3000	4000	5000	6000	7000	8000	9000	10000	11000	12000
R22	220-240V/50Hz	(13000-30000 BTU/h)											
R32	220-240V 50Hz	(9200-41000 BTU/h)											
R32	380V 50Hz	(41000 BTU/h)											

压缩机产品规格 Compressor Spec.

R32 T1 [1φ]220-240V 50Hz

系列 Series	压缩机型号 Model	排量 Displ.(cc)	冷量 Capacity (Btu/h)	制冷量 Refrigerating Capacity (W)	功率 Power (W)	COP (W/W)	电容 Capacitor(μF)	测试工况 Test Conditions	压缩机高度 Compressor Height (mm)	排气管内径 Discharge Pipe ID (mm)	回气管内径 Suction Pipe ID (mm)
B	QXF-B098	9.8	9281	2720	696	3.91	30uF/450V	高能效工况 Hi-efficiency Working Condition	260.5	8.2	9.7
E	QXF-E19	19.0	19039	5580	1398	3.99	50uF/450V	高能效工况 Hi-efficiency Working Condition	312.5	9.7	16.2
E	QXF-E25	25.0	25078	7350	1842	3.99	60uF/450V	高能效工况 Hi-efficiency Working Condition	337.5	9.7	16.2
F	QXFS-F265	26.5	25965	7610	1888	4.03	50uF/450V	高能效工况 Hi-efficiency Working Condition	370.2	9.7	16.2

R22 T1 [1φ]220-240V 50Hz

系列 Series	压缩机型号 Model	排量 Displ.(cc)	冷量 Capacity (Btu/h)	制冷量 Refrigerating Capacity (W)	功率 Power (W)	COP (W/W)	电容 Capacitor(μF)	测试工况 Test Conditions	压缩机高度 Compressor Height (mm)	排气管内径 Discharge Pipe ID (mm)	回气管内径 Suction Pipe ID (mm)
C	QXK-C238	23.8	13469.5	3950	1290	3.06	35uF/450V	ASHRAE/T	304.0	9.7	12.2
F	QXK-F34	34.0	19437	5700	1840	3.10	50uF/450V	ASHRAE/T	339.0	9.7	12.87
SF	QXSK-F475	47.5	28473.5	8350	2730	3.06	60uF/450V	ASHRAE/T	397.2	9.7	16.2
	QXSK-F49	49.0	29735.2	8720	2800	3.11	60uF/450V	ASHRAE/T	397.2	9.7	16.2

R32 [3φ]380V 50Hz

系列 Series	压缩机型号 Model	排量 Displ.(cc)	冷量 Capacity (Btu/h)	制冷量 Refrigerating Capacity (W)	功率 Power (W)	COP (W/W)	电容 Capacitor(μF)	测试工况 Test Conditions	压缩机高度 Compressor Height (mm)	排气管内径 Discharge Pipe ID (mm)	回气管内径 Suction Pipe ID (mm)
F	QXFS-F41s	41.0	41046	12030	2927	4.11	/	高能效工况 Hi-efficiency Working Condition	376.2	9.7	16.2

备注：型号带“※”,代表开发中。“▲”代表推荐机型。
Note: A model with “※” is under development.
A model with “▲” is the recommended model.

压缩机标准尺寸示意图
Compressor Standard Size Diagram

压缩机尺寸范围 Compressor Dimension Range

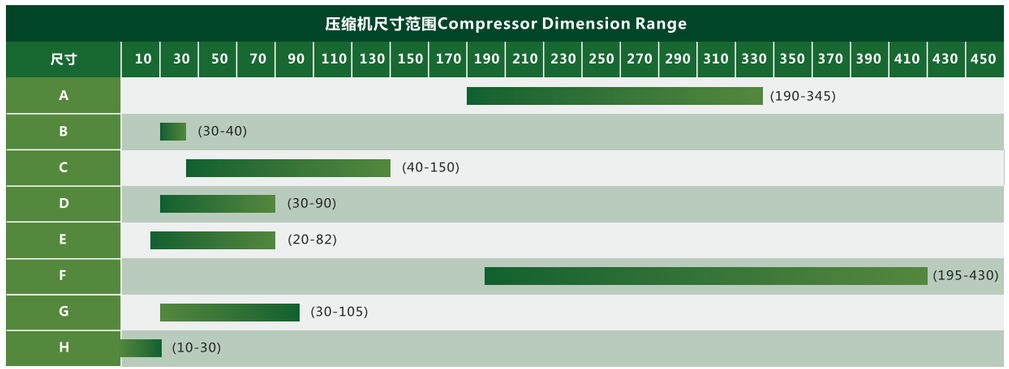

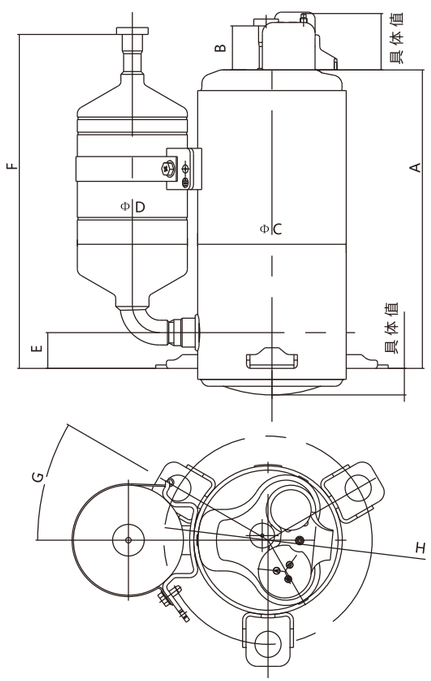

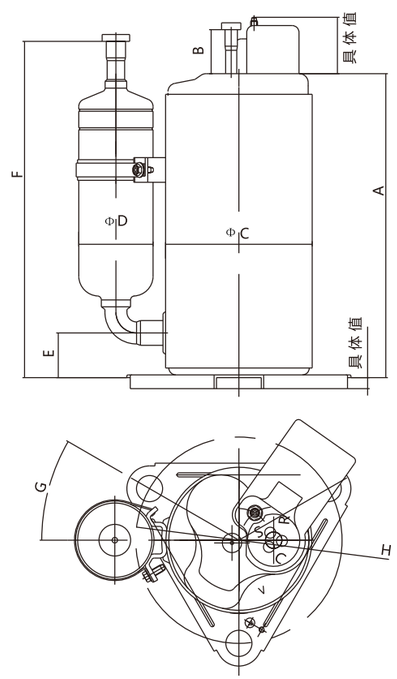

N系列 Series

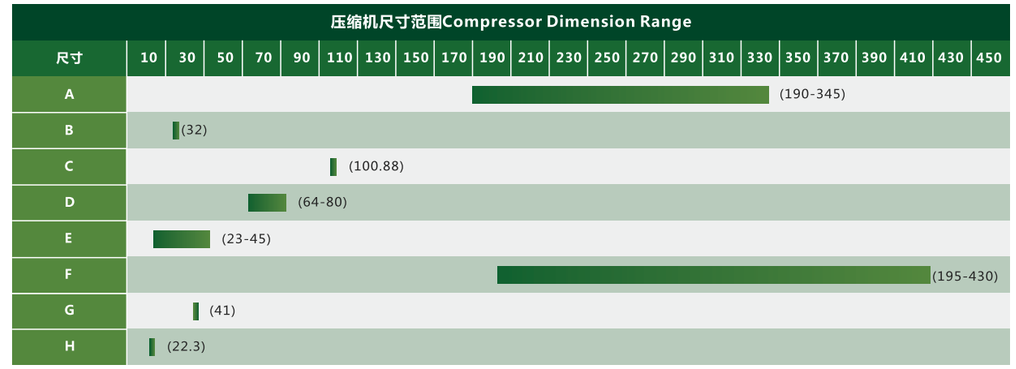

C系列 Series

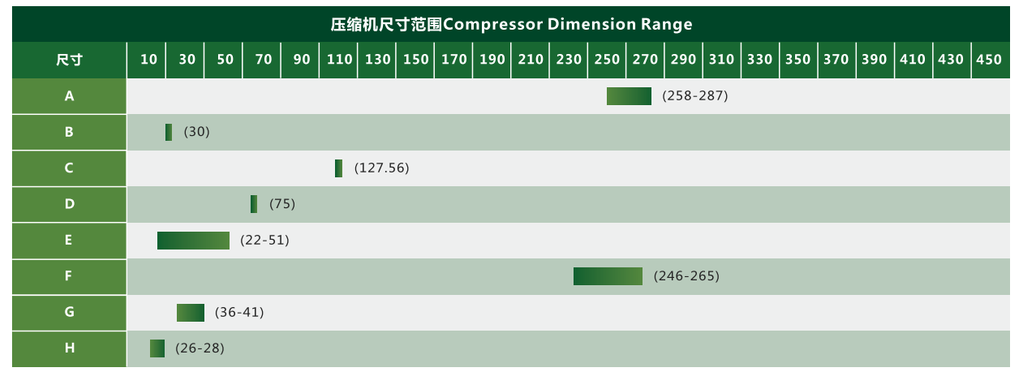

D系列 Series

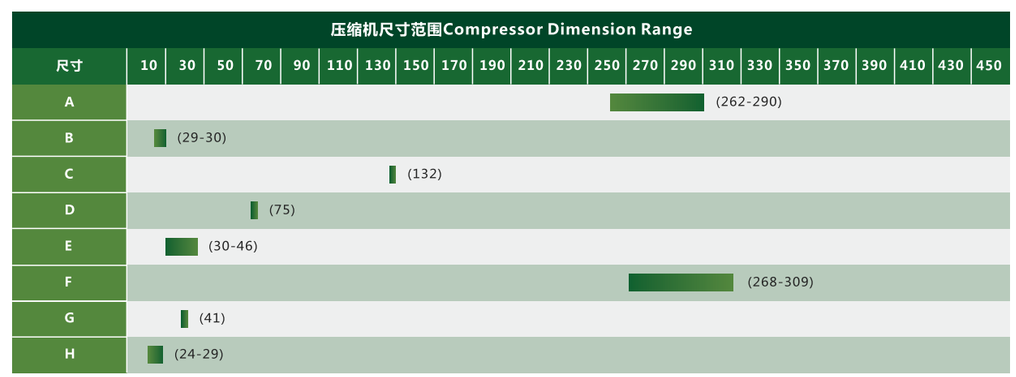

E系列 Series

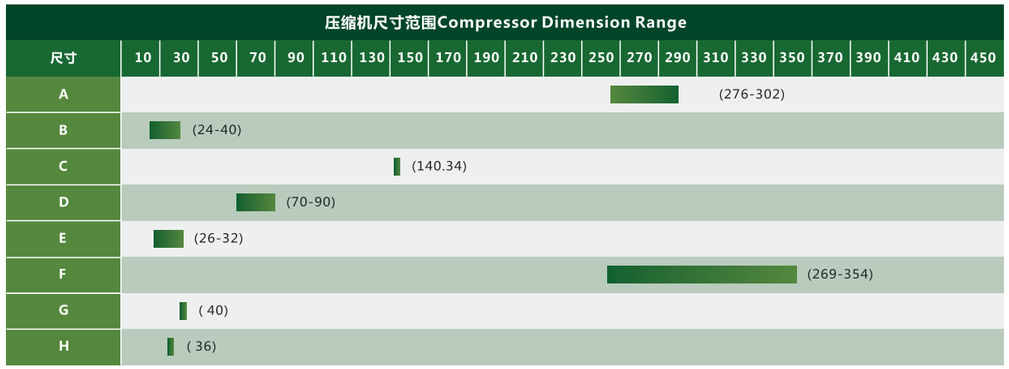

M系列 Series

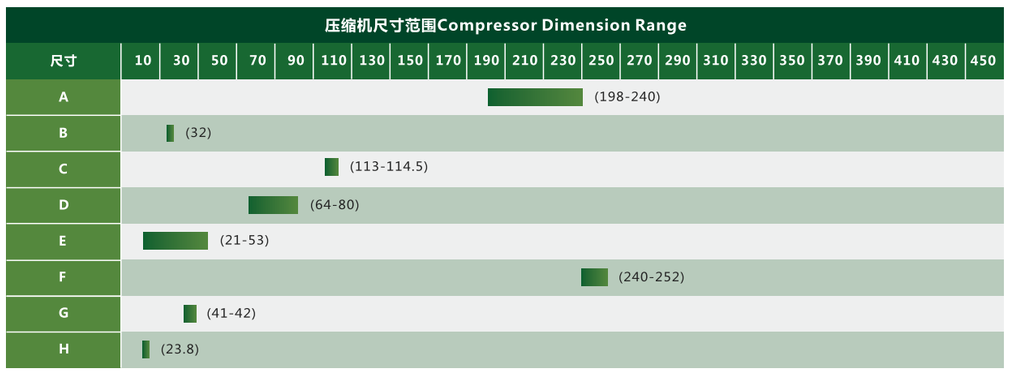

F系列 Series

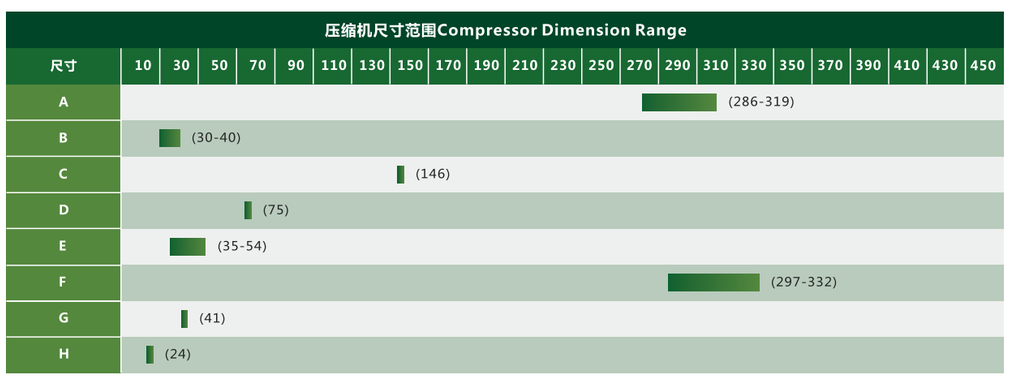

SE系列 Series

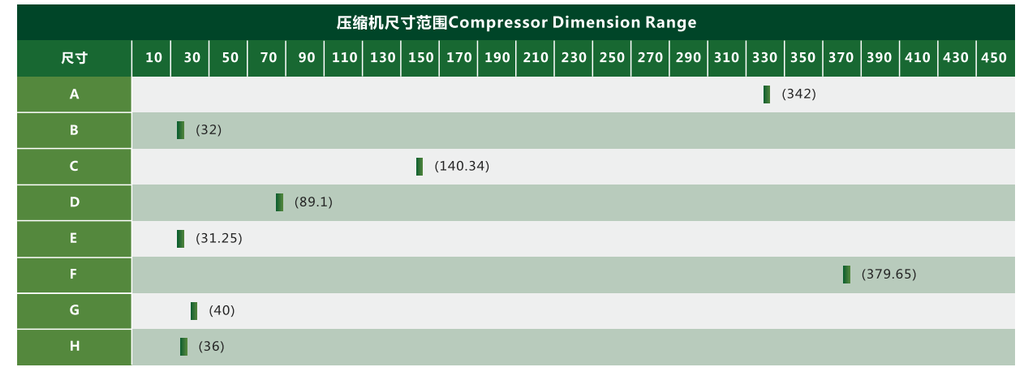

SM系列 Series

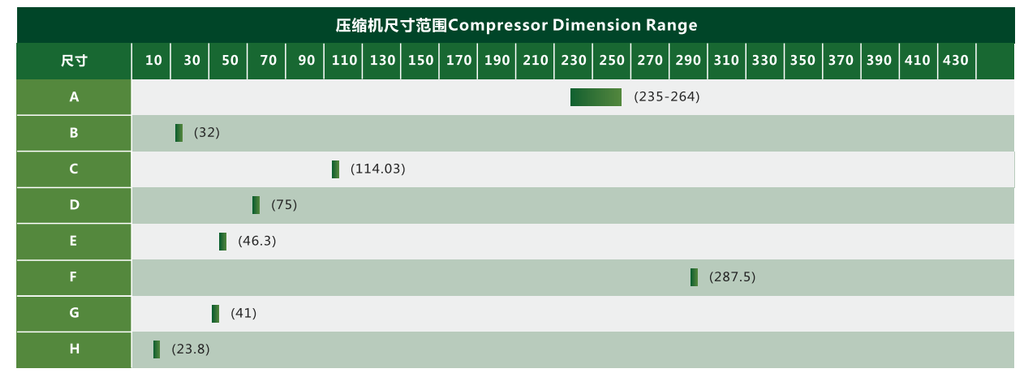

SB系列 Series

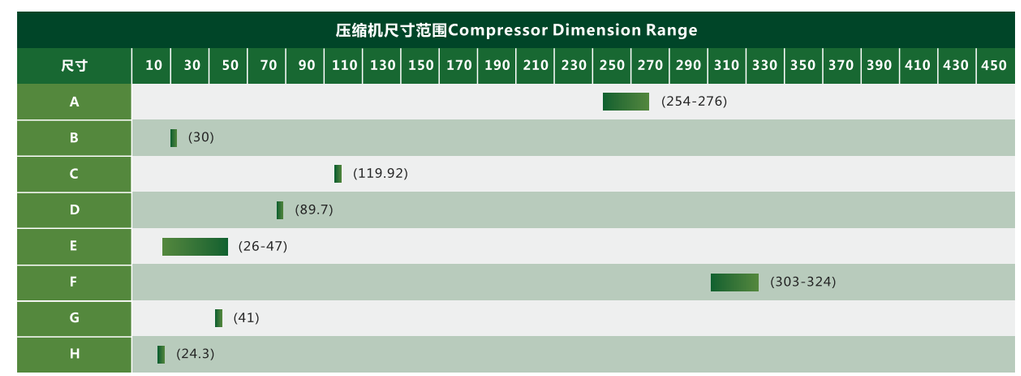

SB系列 Series

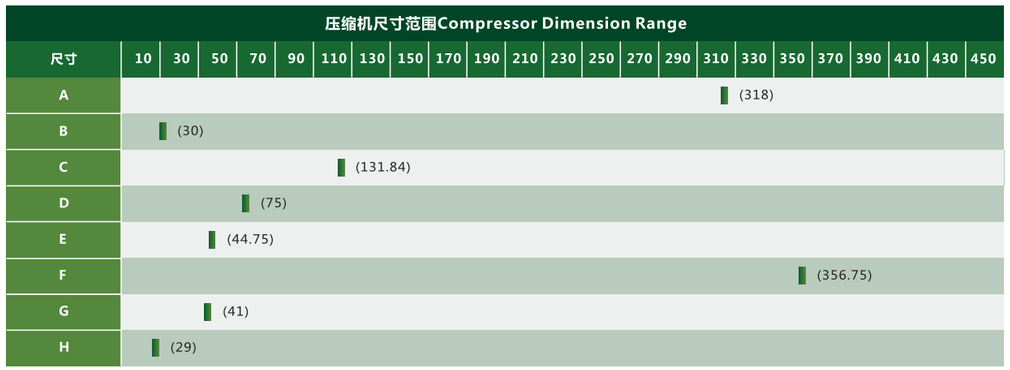

SF系列 Series

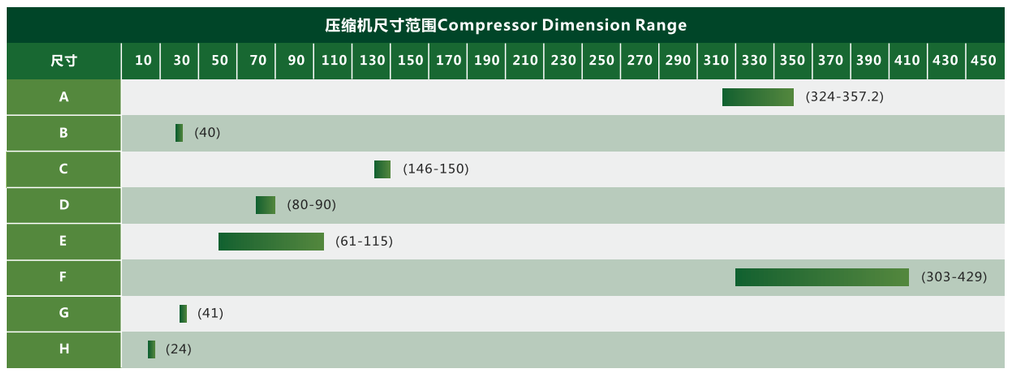

SH系列 Series

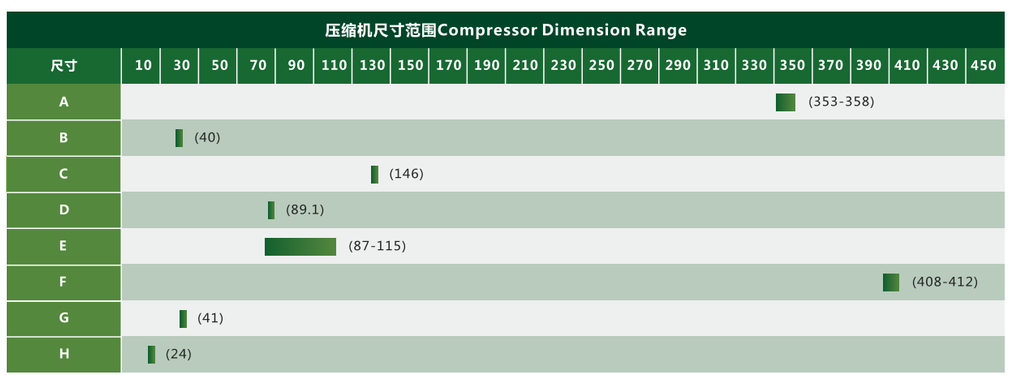

产品介绍 Product Introduction

压缩机包装
Packing of Compressor

依据运输要求，分为包装Ⅰ和包装Ⅱ，分别见下图：
Packings are sorted as packing Ⅰ and packing Ⅱ according to the transport requirements, see the figure at below:

系列代号 Series Code	托盘规格 Pallet Spec. L(mm)xW(mm)	每箱数量 Qty. per Box (台 PC)	每箱高度 Height per Box H(mm)			每箱毛重(kg) Gross Weight per Box (kg)		
P	459×314	16	303	~	-	15	~	-
	1170×990	336	614	~	-	363	~	-
K	1150×1100	192	872	~	-	703	~	-
G-120mm底脚 G-120mm Foot	1150×1100	168	850	~	1050	810	~	1120
G-150mm底脚 G-150mm Foot	1150×1100	126	850	~	1050	810	~	900
N	1150×1100	72	740	~	870	580	~	680
A	1150×1100	72	740	~	870	500	~	760
M	1150×1100	72	780	~	980	610	~	900
B-150mm底脚 B-150mm Foot	1150×1100	72	810	~	970	680	~	1020
B-175mm底脚 B-175mm Foot	1150×1100	60	810	~	970	620	~	860
C	1150×1100	60	860	~	940	890	~	1000
D	1150×1100	50	890	~	1120	800	~	1070
E	1150×1100	50	950	~	1120	990	~	1230
F	1150×1100	48	900	~	1210	1010	~	1350
H	1150×1100	20	660	~	760	700	~	820

注：1）不含卧式机型，增焓机型等。
2）上表为各系列大部分的包装参数，特殊机型以实际为准
Note: 1) Horizontal models & Enthalpy-increasing models are not included.
2) The above are most of the packing data of each series,the special models shall be subject to the actual conditions.

包装一
Packing Ⅰ

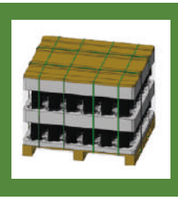

包装二
Packing Ⅱ

压缩机标准附件
Compressor Standard Accessories

标准附件 Standard Accessories		内保护器定速机种 Internal Protector Fixed Speed Model	外保护器定速机种 External Protector Fixed Speed Model	对应变频机种 Corresponding Inverter Model	
				需感温器 With Temp. Sensor	不需感温器 Without Temp. Sensor
端子罩 Terminal Cover		●			●
			●		
				●	
端子垫片 Terminal Gasket		●			●
			●		
				●	
端子螺母 Terminal Nut		●	●	●	●
外置保护器 External Protector			●		
感温器 Temperature Sensor				●	
橡胶垫 Rubber		●	●	●	●
		●	●	●	●

Technical Services
技术服务

多元化高效精品压缩机产品
Diversified and high quality compressors

性能、噪音、应力等整体式解决方案以及系统技术解决方案
Overall solutions for performance, noise, stress, and system

共同开发
Joint development

快速反应的生产供货服务
Rapid supply& delivery service