NEWEX

Experience New

NEWEX INTERNATIONAL CO., LTD

PHILEXI is a trademark of NEWEX INTERNATIONAL CO., LTD

Hongkong Office Address:

FLAT/RM 02, 7/F, SPA CENTRE,
NO.53-55 LOCKHART ROAD,
WAN CHAI, HONG KONG

Sourcing Manager/ Sales Manager: Mr. Justin
Whatsapp/Mobile/Wechat: +8613928822021
Skype ID: liangshizong
Email: justin@philexi.com, justin.liang@newexintl.com

Guangzhou Office Address:

Room 505, BLDG A, Hengda Business
Center, 3rd Bigui Road, Luopu Street,
Panyu District, Guangzhou, China

创新科技 卓越智造

CREATIVE TECHNOLOGY SMART MANUFACTURING

珠海凌达压缩机有限公司 ZHUHAI LANDA COMPRESSOR CO., LTD.

LANDA

2021

特殊用途压缩机

COMPRESSOR FOR SPECIAL-PURPOSE/SPECIAL-AREA

珠海凌达压缩机有限公司

ZHUHAILANDA COMPRESSOR CO.,LTD.

Contents
目录

01企业简介 Company Profile---(03)

●企业概况 Brief Introduction---(03)
●企业荣誉 Company Honors---(04)
●发展历程 Development Milestones---(05)

02产品介绍 Product Introduction---(07)

●旋转压缩机 Rotary Compressor---(07)
▶产品命名规则及测试工况 Naming Rules and Test Conditions---(07)
▶热泵热水器压缩机 Compressor for HPWH---(10)
▶除湿机压缩机 Compressor for Dehumidifier---(16)
▶干衣机压缩机 Compressor for HPD---(20)
▶基站/机柜用压缩机 Compressor for Base Station AC/ Cabinet Compressorr---(24)
▶工业制冷用压缩机 Industrial Refrigeration Compressor---(27)
▶微型压缩机 Mini Compressor---(30)
▶冷冻冷藏压缩机 Compressor for Freezing and Refrigeration---(32)
▶车载压缩机 Vehicle Compressor---(37)
●压缩机标准尺寸示意图 Compressor Standard Size Diagram---(41)
●压缩机包装 Packing of Compressor---(48)
●压缩机标准附件 Compressor Standard Accessories---(49)

03技术服务 Technical Services---(50)

企业概况 Brief Introduction

珠海凌达压缩机有限公司始建于1985年，是一家集研发、生产、销售、服务于一体的空调压缩机专业生产企业，同时也是我国家用空调压缩机行业较早且少有具有规模化、专业化的民族企业。2004年成为珠海格力电器股份有限公司全资控股子公司。

公司致力于打造引领压缩机行业的绿色环保高新技术企业，目前拥有五大生产基地，三个办事处，公司现有员工10000余人，其中技术管理人员1300余人，专职从事研发人员有600余人，压缩机年产能达6000万台。

Founded in 1985, Zhuhai Landa Compressor Co., Ltd. is a large-scale, professional and domestic compressor manufacturer, mainly specializing in R&D, production, sales and services of the air-conditioner compressor. In 2004, Landa became a subsidiary wholly owned by Gree Electric Appliances.

Landa is committed to creating a high tech and green enterprise leading the compressor industry. So far, the company has 5 production bases, 3 offices and over 10,000 employees, including 1300 technical and administrative staffs and more than 600 R&D technicians, with the annual capacity of 60 million units.

企业荣誉 Company Honors

在不断追求卓越的路上，珠海凌达也得到社会各级政府及协会的认可，获得了包括“全国质量奖”、“国家知识产权示范企业”、“高新技术企业”、“全国质量标杆”、“中国轻工百强”、“广东省政府质量奖”、“广东省重点企业技术中心”、“广东省工程技术研究中心”、“广东省知识产权示范企业”、“广东省名牌产品”、“珠海市市长质量奖”等多项荣誉。

On the way to make progress, Zhuhai Landa has been recognized by the government and associations at all levels with honors, such as the China Quality Award, the National Intellectual Property Demonstration Enterprise, High and New-Technology Enterprise, National Quality Benchmarking Enterprise, Top 100 Enterprises in National Light Industry, Guangdong Governmental Quality Award, Guangdong Key Enterprise Technical Center, Guangdong Engineering Technology Center, Guangdong Intellectual Property Demonstration Enterprise, Guangdong Famous Brand, Zhuhai Mayor Quality Award, etc.

企业简介 Company Profile

发展历程 Development Milestones

1985

• 我司是我国较早引入全封闭回转压缩机技术，也是我国少有的具有规模化、专业化的空调压缩机生产企业。
Landa was not only one of the first enterprises introduced hermetic rotarycompressor technology, but also a large- scale and professional domestic AC compressor manufacturer.

1986

• 投产国内第一台Supearl滑片式回转压缩机，生产设备全部由美国惠而浦（Whirlpool）公司引进。
Landa started the production of Supearl sliding-vane rotary compressor with the equipment introduced from Whirlpool.

1990

• 产品规格增至28个，产品功率范围扩大至50-1100W，产品主要用于冰箱、冷冻柜、冷藏箱、空调以及除湿机、真空泵。
Landa developed 28 models with the power range expanded to 50-1100W, which were mainly used for refrigerators, freezers, air conditioners, dehumidifiers and vacuum pumps.

1992

• 从Rotorex引进具有国际先进水平的滚动转子式压缩机技术。从美国、日本引进机加工。
Landa introduced the international-leading rotary compressor technology from Rotorex, as well as the advanced processing equipment from US and Japan.

1994

• 开始生产国内第一代滚动转子式压缩机，以C48系列为主。
Started production of the first generation of rolling-piston rotary compressor, mainly C48 series.

1996-2004

• 第二代滚动转子压缩机技术系列化，自主研发C55系列。
The technology of the second generation was further improved, the C55 series was developed successfully.

2006

• 研发并投产第三代紧凑型滚动转子式压缩机C44/C49。
The third generation rotary compressor with compact structures was developed and put into production.

2008

• 凌达全面改善各系列产品能效，大幅提高压缩机匹配适用性。
Landa generally improved the energy efficiency of each series products so that it largely improved compressor applicability.
• 研发出针对北美窗机市场的小型化产品C39系列。
Landa developed C39 series products, which was small in size and against window-type air-conditioners in North American market.
• 首款R290压缩机获得项目验收。
The first R290 compressor passed project acceptance.
• 研发出采用环保R410A工质的直流变频空调压缩机。
The R410A compressor for DC inverter air-conditioner was developed.

2009

• 研发出双缸产品。
Developed the twin-cylinder compressors.
• 研发出专用于除湿机的压缩机。
Developed the compressors for dehumidifiers.
• 研发出热泵热水器专用压缩机。
Developed the compressors for heat pump water heaters.

2010

• 研发出R290空调QXD-C184压缩机。
Developed the QXD-C184 compressors for R290 air conditioners.
• 研发出中东专用压缩机。
Developed the compressors for Middle East market.

2011

• 研发出定频超高效压缩机。
Developed the fixed-speed super high efficiency compressors.

2012

• 研发出纯天然工质R290空调压缩机;
Developed R290 compressors for air conditioners.
• 研发出无稀土压缩机;
Developed the rare earth-free compressors.
• 研发出卧式低温冷藏用压缩机。
Developed the horizontal compressors for cryogenic temperature refrigeration.

2013

• 研发出定频增焓压缩机。
Developed the fixed speed vapor injection compressors.

2014

• 优化超低温冷藏领域产品。
Improved the compressors for super cryogenic temperature refrigeration field.

2015

• 研发出干衣机专用压缩机并实现量产。
The compressors for heat pump dryers were developed and mass produced.
• 为满足欧洲高效除湿机和内销1P空调的轻巧化，我司成功量产C42系列压缩机。
The C42 series was mass produced for the hi-efficient dehumidifiers in European market and small 1HP air conditioners sold in domestic market.
• 全新开发C63系列产品5HP压缩机。
Developed C63 series compressors with 5HP capacity.

2016

• N系列高效小型化压缩机量产;
N series high efficiency and small compressors were put into mass production.
• 三缸双级变容积比压缩机量产。
Three-cylinder twin-stage variable displacement compressors were put into mas production.

2017

• 大规格冷冻冷藏用压缩机量产。
Large capacity compressors for freezing and refrigeration were put into production.
• 10~12m新能源大巴用压缩机量产。
The compressor was for 10~12m new energy bus put into production.

2018

• 中东沙特特高效压缩机专属工艺开发成功。
Successfully developed exclusive process for super high efficiency compressor against Saudi Arabia market in Middle East.

2019

• 研发出 G-EVI高效采暖热泵压缩机。
Developed the G-EVI HP compressors.

产品介绍 Product Introduction

产品命名规则Naming Rules

旋转压缩机 Rotary Compressor

命名规则一 Naming Rules I

Q X C S H - B 17 x B 0 90 A R

- Q：全封闭式 Hermetic
- X：X 旋转立式 Rotary Vertical；Y 旋转卧式 Rotary Horizontal
- S：气缸结构 Cylinder Structure

代号 Code	气缸结构 Cylinder Structure
……	单缸 Single Cylinder
S	双缸单级 Twin-Cylinder& Single-Stage
T	双缸双级 Twin-Cylinder& Twin-Stage
V	双缸变容 Twin-Cylinder& Variable Displacement
N	双缸双级变容 Twin-Cylinder&Twin-Stage& Variable Displacement
W	三缸双级变容 Three-Cylinder&Twin-Stage& Variable Displacement
U	三缸双级压缩（非变容） Three-Cylinder& Twin-Stage Compression (Non-Variable)
a	单缸单级增焓 Single-Cylinder& Single-Stage &Enthalpy-Increasing
b	双缸单级增焓 Twin-Cylinder& Single-Stage &Enthalpy-Increasing

- H：代号 Code / 用途 Applications

代号 Code	用途 Applications
……	T1 或不需要标识用途
H	T3
R	热泵热水器 HPWH
L	低温冷藏 Low Temp. Refrigeration
K	风管机 Duct AC
M	干衣机 HPD
O	除湿机 Dehumidifier
Y	移动机 Mobile AC
P	低电压空调 low-Voltage AC

- 17：气缸名义工作容积:2~3位数表示 In 2 or 3-digits Cylinder nominal displacement
- x：代号 Code / 定子外径 Stator O.D.

代号 Code	定子外径 Stator O.D.
A	¢101
B	¢112
C	¢121.7
D	¢125
E	¢133.5
F	¢139
G	¢88
H	¢161
J	¢58.6
K	¢81.4
M	¢107
N	¢94
T	¢150
P	¢50.5
S	¢66.0
U	¢89.8

- B：分液器规格 Accumulator Spec.
- 0：代号 Code / 电源 Power Supply

代号 Code	电源 Power Supply
……	220V-240V,50Hz
r	208V-230V,60Hz
x	115V,60Hz
v	127V,60Hz
j	交流变频 AC Inverter
z	直流变频 DC Inverter
s	380V,50Hz,三相电源 Three-Phase Power Supply
w	220V,60Hz,三相电源 Three-Phase Power Supply
y	265V,60Hz
u	230V,50Hz
m	380V,60Hz,三相电源 Three-Phase Power Supply

- 90：改进顺次号 S/N of Improvement；安装板角度 Angle of Mounting Plate；安装板尺寸 Mounting Plate Spec.
- A：特殊说明 Special Statement
- R：代号 Code / 制冷剂 Refrigerant

代号 Code	制冷剂 Refrigerant
……	R22
A	R410A
B	CO2
C	R407C
D	R290
E	R134a
F	R32/R410A通用（具体以规格书为准）
G	R404A
I	R1234yf/R134a/ R513A通用
J	R600a

命名规则二 Naming RulesII

Y A T u 72 - A A 017 A A A A - A

- Y：…… 旋转立式；Y 旋转卧式
- A：代号 Code / 制冷剂 Refrigerant

代号 Code	制冷剂 Refrigerant
R	R22
A	R410A
B	CO2
C	R407C
D	R290
E	R134a
F	R32
G	R404A
I	R1234yf
J	R600a

- T：代号 Code / 用途 Applications

代号 Code	用途 Applications
A	北美/中国高效空调 NA/China High Efficient AC
B	北美单元机(超高效)空调 NA Unit AC(Super~efficient)
C	热带T3高效空调 T3 High-Efficiency AC for Tropical Areas
F	超低温冷冻 Ultra-Low Temp. Refrigeration
G	中高温冷冻冷藏 Mid-High Temp. Refrigeration
H	热带T3普通空调 T3 Common AC for Tropical Areas
J	舰船 Naval Ship
K	风管机 Duct AC
L	低温冷藏 Low Temp. Refrigeration
M	干衣机 HPD
O	除湿机 Dehumidifier
P	低电压空调 Low-Voltage AC
Q	车载压缩机 Vehicle Compressor
R	热泵热水器 HPWH
S	基站空调 Base Station AC
T	一般空调 Common AC
Y	移动机 Mobile AC

- u：电压 Voltage；代号 Code / 电源 Power Supply

代号 Code	电源 Power Supply
……	220V-240V,50Hz
r	208V-230V,60Hz
x	115V,60Hz
v	127V,60Hz
j	交流变频 AC Inverter
z	直流变频 DC Inverter
s	380V,50Hz,三相电源 Three-Phase Power Supply
w	220V,60Hz,三相电源 Three-Phase Power Supply
y	265V,60Hz
u	230V,50Hz
m	380V,60Hz,三相电源 Three-Phase Power Supply

- 72：气缸名义工作容积:3位数表示 In 3-digits Cylinder nominal displacement
- A：代号 Code / 气缸结构 Cylinder Structure

代号 Code	气缸结构 Cylinder Structure
A	单缸 Single Cylinder
S	双缸单级 Twin-Cylinder& Single-Stage
T	双缸双级 Twin-Cylinder& Twin-Stage
V	双缸变容 Twin-Cylinder& Variable Displacement
N	双缸双级变容 Twin-Cylinder& Twin-Stage&Variable Displacement
W	三缸双级变容 Three-Cylinder& Twin-Stage&Variable Displacement
U	三缸双级压缩（非变容） Three-Cylinder& Twin-Stage Compression (Non-Variable)

- A：改进顺次号 S/N of Improvement；安装板角度 Angle of Mounting Plate；安装板孔径 Mounting Plate I.D.；分液器规格 Accumulator Spec.
- A：代号 Code / 电机特点 Motor Features

代号 Code	电机特点 Motor Features
A	钕铁硼电机 NdFeB Motor
B	铁氧体电机 Ferrite Motor
C	112电机 112 Motor
D	单相异步电机 Single-Phase Asynchronous Motor
E	101电机 101 Motor
F	三相异步电机 Three-Phase Asynchronous Motor

- A：系列代号 Series Code / 定子外径 Stator O.D.

系列代号 Series Code	定子外径 Stator O.D.
A	¢101
B	¢112
C	¢121.7
D	¢125
E	¢133.5
F	¢139
G	¢88
H	¢161
J	¢58.6
K	¢81.4
M	¢107
N	¢94
T	¢150
P	¢50.5
S	¢66
U	¢89.8

旋转式压缩机测试工况
Test Conditions

适用工况 Applicable Working Conditions	冷凝温度℃ Condensing Temp.	蒸发温度℃ Evaporating Temp.	过冷度℃ Supercooling Degree	吸气温度℃ Suction Temp.	环境温度℃ Ambient Temp.
ASHRAE/T	54.4	7.2	8.3	35	35
国标高能效工况 GB Hi-efficiency Working Condition	46	7.2	8.3	18.3	35
高能效工况 Hi-efficiency Working Condition	45	7.2	8.3	18.3	35
北美高能效工况 High-energy/efficiency Condition for North America	45	12	5	24	35
干衣机工况 HPD condition	70	25	9	35	35
冷冻冷藏工况 Freezing/Refrigeration Condition	54.4	-23.3	22.2	18.3	32.2
变频工况 Inverter Condition	46	10	5	18	35
变频高能效工况 Inv. High Energy Efficiency Condition	49	10.5	8	24	35
热泵工况 Heat Pump Working Condition	60	10	50	20	35

COMPRESSOR FOR HPWH
热泵热水器压缩机

①热泵热水器压缩机 Compressor for HPWH

制热原理 Heating Principle

低温低压气态冷媒进入压缩机，通过压缩机压缩后，形成高温高压气态冷媒；然后通过套管换热器，给冷水加热，水温升高，从而得到热水，此时，形成中温高压液态冷媒；然后通过膨胀阀（或毛细管），形成中温低压气液混合冷媒；最后通过空气热交换器，在风扇作用下，从环境吸热，形成低温低压气态冷媒。

The low-temp. & low pressure gas refrigerant enters the compressor and is compressed to form a high-temp.& high-pressure gas refrigerant. Then, the casing heat exchanger is used to heat the cold water, and the water temp. is raised to obtain hot water, during this time, a medium-temp.& high pressure liquid refrigerant is formed, after that, a medium-temp. & low pressure gas-liquid mixed refrigerant come into being based on the expansion valve (or capillary). Finally, through the air heat exchanger, under the action of the fan, heat is absorbed from the environment to form a low-temp. & low pressure gas refrigerant.

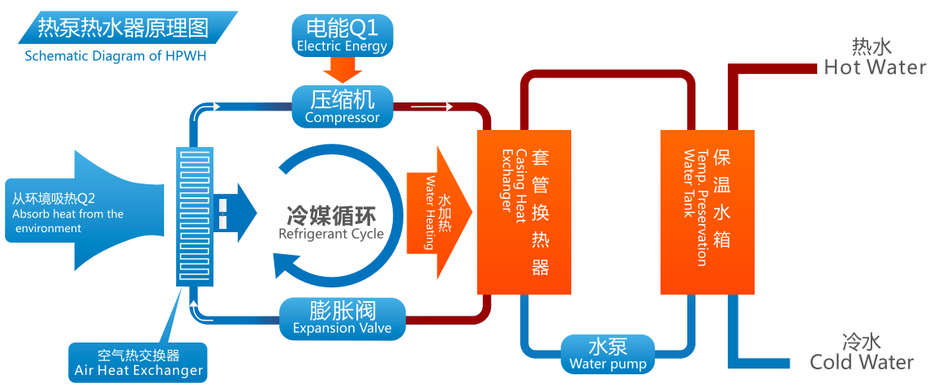

冷媒系列产品特点：Features of R290/R22/R410A/R134a Series Products

R22系列产品特点
Features of R22 Series Products

●小型化：同制热量下尺寸小
Miniaturization: Small size under the same heating capacity.
●高出水温度：最高出水温度可达65℃
Outlet water temp.: The max outlet water temp. is up to 65 degrees centigrade.
●超长使用寿命：设计寿命达10年
Ultra-long service life: 10 years.
●低噪声/低振动：超静音无察觉运行
Low noise/vibration: Ultra-quite operation.
●全年高能效运行：耗电量为普通电热水器的1/4
Energy efficient operation: Power consumption is a quarter of an ordinary electric water heater.
●低温制热特性优良：低环温下制热效果衰减少
Excellent heating performance: Good heating effect at low ambient temperatures.

R410A系列产品特点
Features of R410A Series Products

●环保冷媒：臭氧层破坏潜能ODP=0
Ozone depletion potential (ODP) is zero.
●高出水温度：最高出水温度可达65℃
Outlet water temp.: The max outlet water temp. is up to 65 degrees centigrade.
●超长使用寿命：设计寿命达10年
Ultra-long service life: 10 years.
●低噪声/低振动：超静音无察觉运行
Low noise/vibration: Ultra-quite operation.
●超低温环温制热：-15℃下制热不衰减
No heating attenuation at minus 15 degrees centigrade.

R134a系列产品特点
Features of R134a Series Products

●环保冷媒：臭氧层破坏潜能ODP=0
Ozone depletion potential (ODP) is zero.
●高出水温度：最高出水温度可达76℃
Outlet water temp.: The max outlet water temp. is up to 76 degrees centigrade.
●超长使用寿命：设计寿命达10年
Ultra-long service life: 10 years.
●低噪声/低振动：超静音无察觉运行
Low noise/vibration: Ultra-quite operation.
●全年高能效运行：耗电量为普通电热水器的1/4
Energy efficient operation: Power consumption is a quarter of an ordinary electric water heater.

R290系列产品特点
Features of R290 Series Products

●环保冷媒：臭氧层破坏潜能ODP=0
Ozone depletion potential (ODP) is zero.
●高出水温度：最高出水温度可达65℃
Outlet water temp.: The max outlet water temp. is up to 65 degrees centigrade.
●超长使用寿命：设计寿命达10年
Ultra-long service life: 10 years.
●低噪声/低振动：超静音无察觉运行
Low noise/vibration: Ultra-quite operation.
●低温制热特性优良：低环温下制热效果衰减少
Excellent heating performance: Little heating attenuation at low ambient temperatures.

①热泵热水器压缩机 Compressor for HPWH

压缩机型谱 Product Spectrum

热泵热水器压缩机 HP Compressor													
产品类别 Product Category		压缩机能力范围 Capacity Range											
冷媒 Refrigerant	电压/频率 Voltage V/ Frequency	BTU/h	1706	8530	15354	22178	29002	35826	42650	49474	56298	63122	69946
		W	500	2500	4500	6500	8500	10500	12500	14500	16500	18500	20500
R22	220-240V 50Hz	(6500-22000 BTU/h)											
R134a	220-240V 50Hz	(4000-16000 BTU/h)											
R290	220-240V 50Hz	(2500-4700 BTU/h)											
R410A	DC	(15000-62000 BTU/h)											
	220-240V 50Hz & 208-230V 60Hz	(14000-52000 BTU/h)											
	380V 50Hz	(50000-66000 BTU/h)											

压缩机产品规格 Compressor Spec.

R290 T1 [1φ]220-240V 50Hz

系列 Series	压缩机型号 Model	排量 Displ.(cc)	热量 Capacity (Btu/h)	制热量 Heating Capacity (W)	功率 Power (W)	COP (W/W)	电容 Capacitor(μF)	测试工况 Test Conditions	压缩机高度 Compressor Height (mm)	排气管内径 Discharge Pipe ID (mm)	回气管内径 Suction Pipe ID (mm)
A	QXDR-A058	5.8	2799	820	270	3.04	10uF/450V	ASHRAE/T	203	6.2	9.7
	QXDR-A088	8.8	4642	1360	425	3.20	20uF/450V	ASHRAE/T	219	6.2	9.7

R22 T1 [1φ]220-240V 50Hz

系列 Series	压缩机型号 Model	排量 Displ.(cc)	热量 Capacity (Btu/h)	制热量 Heating Capacity (W)	功率 Power (W)	COP (W/W)	电容 Capacitor(μF)	测试工况 Test Conditions	压缩机高度 Compressor Height (mm)	排气管内径 Discharge Pipe ID (mm)	回气管内径 Suction Pipe ID (mm)
B	QXR-B120	12	6909	2025	730	2.77	25	热泵工况 HP Working Condition	280	9.7	12.2
	QXR-B15	15	8803	2580	940	2.75	35	热泵工况 HP Working Condition	269	9.7	12.2
	QXR-B160※	16	9305	2727	1027	2.68	35	热泵工况 HP Working Condition	259	8.2	9.7
	QXR-B217※	21.7	12966	3800	1365	2.78	45	热泵工况 HP Working Condition	281	9.7	12.2
C	QXR-C193	19.3	10580	3100	1030	3.01	35	ASHRAE/T	297	9.7	12.2
	QXR-C238	23.8	13822	4050	1460	2.7	35	热泵工况 HP Working Condition	297	9.7	12.2

R22 T1 [1φ]220-240V 50Hz

系列 Series	压缩机型号 Model	排量 Displ.(cc)	热量 Capacity (Btu/h)	制热量 Heating Capacity (W)	功率 Power (W)	COP (W/W)	电容 Capacitor(μF)	测试工况 Test Conditions	压缩机高度 Compressor Height (mm)	排气管内径 Discharge Pipe ID (mm)	回气管内径 Suction Pipe ID (mm)
F	QXR-F232F030	23.2	13477	3950	1290	3.05	50uF/450V	ASHRAE/T	326	9.7	12.87
	QXR-F305F050	30.7	17913	5250	1690	3.12	60uF/450V	ASHRAE/T	326	9.7	16.2
	QXR-F36F050	35.6	20916	6130	1975	3.1	50uF/450V	ASHRAE/T	343	9.7	16.2

R134a T1 [1φ]220-240V 50Hz

系列 Series	压缩机型号 Model	排量 Displ.(cc)	热量 Capacity (Btu/h)	制热量 Heating Capacity (W)	功率 Power (W)	COP (W/W)	电容 Capacitor(μF)	测试工况 Test Conditions	压缩机高度 Compressor Height (mm)	排气管内径 Discharge Pipe ID (mm)	回气管内径 Suction Pipe ID (mm)
B	QXER-B109	10.9	4260	1250	410	3.05	25uF/450V	热泵工况 HP Working Condition	275	9.7	12.2
	QXER-B122	12.2	4910	1440	472	3.05	25uF/450V	热泵工况 HP Working Condition	275	9.7	12.2
C	QXER-C18	18.0	7160	2100	700	3.00	30uF/450V	热泵工况 HP Working Condition	297	9.7	12.2
F	QXER-F36	35.6	15174	4450	1450	3.06	50uF/450V	热泵工况 HP Working Condition	343	9.7	16.2

单双缸补气增焓压缩机 R410A DC Inverter

系列 Series	压缩机型号 Model	排量 Displ.(cc)	热量 Capacity (Btu/h)	制热量 Heating Capacity (W)	功率 Power (W)	COP (W/W)	频率 Frequency(Hz)	测试工况 Test Conditions	压缩机高度 Compressor Height (mm)	排气管内径 Discharge Pipe ID (mm)	回气管内径 Suction Pipe ID (mm)
N	ARz-SN150	15	21134	6194	1564	3.96	60Hz	ASHRAE/T	265	8.2	12.87
A	ARz-AA106	10.6	15211	4458	1125	3.96	60Hz	ASHRAE/T	207	8.2	12.87
M	ARz-SM141-A	14.1	19483	5710	1465	3.90	60Hz	ASHRAE/T	235	8.2	12.2
D	ATz-SD190	19	27501	8060	2069	3.89	60Hz	ASHRAE/T	306.5	9.7	16.2
F	ARz-SF420-A	42	61382	17990	4610	3.9	60Hz	ASHRAE/T	313.5	9.7	16.2
	ARz-SF420-B	42	61484	18020	4500	4.00	60Hz	ASHRAE/T	328.5	9.7	16.2
H	ARz-SF650	65	95104	27800	7100	3.90	60HZ	ASHRAE/T	371.5	16.2	19.3
	ARz-SH840	84	123104	36080	9179	3.93	60Hz	ASHRAE/T	413.7	16.2	19.3

双级增焓压缩机 R410A [1φ]220-240V 50Hz

系列 Series	压缩机型号 Model	排量 Displ.(cc)	热量 Capacity (Btu/h)	制热量 Heating Capacity (W)	功率 Power (W)	COP (W/W)	电容 Capacitor(μF)	测试工况 Test Conditions	压缩机高度 Compressor Height (mm)	排气管内径 Discharge Pipe ID (mm)	回气管内径 Suction Pipe ID (mm)
B	AR-TB121	12.1	14440	4232	1125	3.76	30uF/450V	ASHRAE/T	278	9.7	12.2
D	AR-TD159	15.9	18493	5420	1420	3.82	45uF/450V	ASHRAE/T	319	9.7	12.2
	AR-TD200	20	23321	6835	1785	3.83	45uF/450V	ASHRAE/T	328	9.7	12.2
F	AR-TF310	31	37157	10930	2890	3.78	60uF/450V	ASHRAE/T	353	9.7	16.2
H	AR-TH420	42	51180	15000	3920	3.83	75uF/450V	ASHRAE/T	426.7	9.7	16.2

①热泵热水器压缩机 Compressor for HPWH

双级增焓压缩机 R410A [1φ]208-230V 60Hz

系列 Series	压缩机型号 Model	排量 Displ.(cc)	热量 Capacity (Btu/h)	制热量 Heating Capacity (W)	功率 Power (W)	COP (W/W)	电容 Capacitor(μF)	测试工况 Test Conditions	压缩机高度 Compressor Height (mm)	排气管内径 Discharge Pipe ID (mm)	回气管内径 Suction Pipe ID (mm)
B	ATr-TB121	12.1	17435	5110	1340	3.8	40uF/450V	ASHRAE/T	278	9.7	12.2

双级增焓压缩机 R410A [3φ]380V 50Hz

系列 Series	压缩机型号 Model	排量 Displ.(cc)	热量 Capacity (Btu/h)	制热量 Heating Capacity (W)	功率 Power (W)	COP (W/W)	电容 Capacitor(μF)	测试工况 Test Conditions	压缩机高度 Compressor Height (mm)	排气管内径 Discharge Pipe ID (mm)	回气管内径 Suction Pipe ID (mm)
H	ARs-TH420-A	42	51521	15100	3900	3.87	/	ASHRAE/T	416.7	12.87	16.2

双级增焓压缩机 R410A DC Inverter

系列 Series	压缩机型号 Model	排量 Displ.(cc)	热量 Capacity (Btu/h)	制热量 Heating Capacity (W)	功率 Power (W)	COP (W/W)	测试频率 Test Frequency	测试工况 Test Conditions	压缩机高度 Compressor Height (mm)	排气管内径 Discharge Pipe ID (mm)	回气管内径 Suction Pipe ID (mm)
D	ATz-TD200	20	30025	8800	2360	3.73	60Hz	ASHRAE/T	300	9.7	12.2
F	ATz-TF310-A	31	48791	14300	3700	3.86	60Hz	ASHRAE/T	341	9.7	16.2

备注：型号带“※”,代表开发中。“▲”代表推荐机型。
Note: A model with “※” is under development.
A model with “▲” is the recommended model.

COMPRESSOR FOR DEHUMIDIFIER
除湿机压缩机

②除湿机压缩机 Compressor for Dehumidifier

技术特点 Techinical Features

A 静音舒适 Quiet and comfortable

•超静音、低振动，低噪方案可比国标低3分贝 Ultra-quiet, low vibration, the noise can be 3dB lower than the national standard.

B 动力强劲 Strong power

•COP高达3.3，除湿强度大 COP as high as 3.3, with higher dehumidifying effect.

C 结构紧凑 Compact structure

•小型化轻量设计，结构更紧凑 Small,light and compact.

D 环保冷媒 Eco-friendly refrigerant

•R290环保冷媒，已获得VDE认证 Adopt R290 eco-friendly refrigerant, certified by VDE.

E 寿命更长 Longer life

•全新冷冻油，长期可靠运行 New refrigerating oil ensures long-term and reliable operation.

压缩机型谱 Product Spectrum

除湿机压缩机 Compressor for Dehumidifier										
产品类别 Product Category		压缩机能力范围 Capacity Range								
冷媒 Refrigerant	电压/频率 Voltage V/ Frequency	BTU/h	1024	3412	5117	6824	8530	10236	11942	13648
		W	300	1000	1500	2000	2500	3000	3500	4000
R410A	115V/60Hz	(4000-9100 BTU/h)								
	220-240V 50Hz									
R290	220-240V 50Hz	(1500-6300 BTU/h)								

压缩机产品规格 Compressor Spec.

R410A T1 [1φ]115V 60Hz

系列 Series	压缩机型号 Model	排量 Displ.(cc)	冷量 Capacity (Btu/h)	制冷量 Refrigerating Capacity (W)	功率 Power (W)	COP (W/W)	电容 Capacitor(μF)	测试工况 Test Conditions	压缩机高度 Compressor Height (mm)	排气管内径 Discharge Pipe ID (mm)	回气管内径 Suction Pipe ID (mm)
G	QXA-G033x	3.3	4096	1200	290	4.15	20uF/250V	北美高能效工况 Hi-energy efficiency Condition for North America	163	6.2	9.7
	QXA-G036x	3.6	4437	1300	310	4.20	20uF/250V	北美高能效工况 Hi-energy efficiency Condition for North America	173	6.2	9.7
	QXA-G048x	4.8	5973	1750	400	4.35	35uF/250V	北美高能效工况 Hi-energy efficiency Condition for North America	188	6.2	9.7
	QXA-G050x	5.0	6246	1830	430	4.25	35uF/250V	北美高能效工况 Hi-energy efficiency Condition for North America	183	6.2	9.7
N	※QXA-N069x	6.9	9010	2640	585	4.51	35uF/250V	北美高能效工况 Hi-energy efficiency Condition for North America	195	8.2	9.7

R290 T1 [1φ]220-240V 50Hz

系列 Series	压缩机型号 Model	排量 Displ.(cc)	冷量 Capacity (Btu/h)	制冷量 Refrigerating Capacity (W)	功率 Power (W)	COP (W/W)	电容 Capacitor(μF)	测试工况 Test Conditions	压缩机高度 Compressor Height (mm)	排气管内径 Discharge Pipe ID (mm)	回气管内径 Suction Pipe ID (mm)
G	QXD-G033	3.3	1519	445	190	2.35	6.5uF/450V	ASHRAE/T	153	6.2	9.7
	QXD-G050	5.0	2389	700	280	2.50	12uF/450V	ASHRAE/T	158	6.2	9.7
	QXD-G058	5.8	2799	820	315	2.60	6.5uF/450V	ASHRAE/T	163	6.2	9.7
	QXD-G062	6.2	3020	885	340	2.60	12uF/450V	ASHRAE/T	167	6.2	9.7
	※QXD-G081	8.1	4027	1180	410	2.88	15uF/450V	ASHRAE/T	188	6.2	9.7
A	QXD-A121	12.1	6210	1820	607	3.00	20uF/450V	ASHRAE/T	208	6.2	9.7

R410A T1 [1φ]220-240V 50Hz

系列 Series	压缩机型号 Model	排量 Displ.(cc)	冷量 Capacity (Btu/h)	制冷量 Refrigerating Capacity (W)	功率 Power (W)	COP (W/W)	电容 Capacitor(μF)	测试工况 Test Conditions	压缩机高度 Compressor Height (mm)	排气管内径 Discharge Pipe ID (mm)	回气管内径 Suction Pipe ID (mm)
G	QXA-G050	5.1	3927	1151	461	2.50	15uF/450V	ASHRAE/T	188	6.2	9.7

除湿机 Dehumidifier

②除湿机压缩机 Compressor for Dehumidifier

R134a T1 [1φ]115V 60Hz

系列 Series	压缩机型号 Model	排量 Displ.(cc)	冷量 Capacity (Btu/h)	制冷量 Refrigerating Capacity (W)	功率 Power (W)	COP (W/W)	电容 Capacitor(μF)	测试工况 Test Conditions	压缩机高度 Compressor Height (mm)	排气管内径 Discharge Pipe ID (mm)	回气管内径 Suction Pipe ID (mm)
G	QXE-G048x	4.8	5988	1755	407	4.30	35uF/250V	ASHRAE/T	173	6.2	9.7

R134a T1 [1φ]220-240V 50Hz

系列 Series	压缩机型号 Model	排量 Displ.(cc)	冷量 Capacity (Btu/h)	制冷量 Refrigerating Capacity (W)	功率 Power (W)	COP (W/W)	电容 Capacitor(μF)	测试工况 Test Conditions	压缩机高度 Compressor Height (mm)	排气管内径 Discharge Pipe ID (mm)	回气管内径 Suction Pipe ID (mm)
G	QXE-G036	3.6	1280	375	160	2.35	7.5uF/450V	ASHRAE/T	143	6.2	9.7
	QXE-G064	6.4	2390	700	260	2.70	10uF/450V	ASHRAE/T	163	6.2	9.7
	QXE-G073	7.3	2730	800	295	2.70	10uF/450V	ASHRAE/T	163	6.2	9.7

备注：型号带“※”,代表开发中。“▲”代表推荐机型。
Note: A model with “※” is under development.
A model with “▲” is the recommended model.

COMPRESSOR FOR HPD
干衣机压缩机

③干衣机压缩机 Compressor for HPD

工作原理 Operating Principle

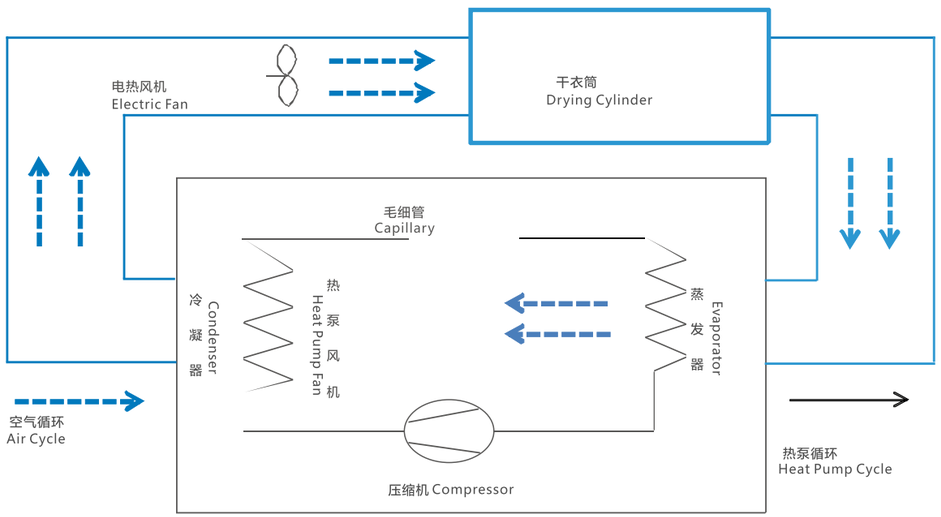

压缩机为热泵循环提供动力，冷凝器加热循环空气，产生高温的干燥空气，风机将干燥空气吹送进干衣筒，干燥空气与湿衣物进行热湿交换，吸收水分形成低温潮湿空气，排出干衣筒后经过蒸发器，被冷却至冷凝水析出。

The compressor provides the power to the heat pump cycle. The condenser heats the circulating air to generate high temperature dry air, the fan blows the dry air into the drying cylinder, so as to exchange heat and moisture with the wet clothes to absorb the water to form a low temperature humid air. After discharging from the drying cylinder, it passes through the evaporator and cooled until the condensed water is precipitated.

技术特点 Techinical Features

A 环保冷媒 Eco-friendly refrigerant

•臭氧层破坏潜能 Ozone depletion potential (ODP) is zero.

B 超长使用寿命 Ultra-long service life

•设计寿命达10年 Service life is up to 10 years.

C 低噪声/低震动 Low noise/vibration

•超静音无察觉运行 Ultra-quite operation.

D 节能高效 Energy efficient

•能效比更高 Higher COP.

压缩机型谱 Product Spectrum

干衣机压缩机 Compressor for HPD										
产品类别 Product Category		压缩机能力范围 Capacity Range								
冷媒 Refrigerant	电压/频率 Voltage V/ Frequency	BTU/h	2730	4777	6824	8871	10918	12966	15013	17060
		W	800	1400	2000	2600	3200	3800	4400	5000
R134a	220-240V/50Hz	(4500-11000 BTU/h)								
R290	220-240V/50Hz	(4000-6000 BTU/h)								

压缩机产品规格 Compressor Spec.

R134a T1 [1φ]220-240V 50Hz

系列 Series	压缩机型号 Model	排量 Displ.(cc)	冷量 Capacity (Btu/h)	制冷量 Refrigerating Capacity (W)	功率 Power (W)	COP (W/W)	电容 Capacitor(μF)	测试工况 Test Conditions	压缩机高度 Compressor Height (mm)	排气管内径 Discharge Pipe ID (mm)	回气管内径 Suction Pipe ID (mm)
A	QXEM-A081	8.1	4808.1	1410	425	3.32	15uF/450V	干衣机工况 HPD Working Condition	203	6.2	9.7
	QXEM-A104	10.4	6240.3	1830	580	3.15	15uF/450V	干衣机工况 HPD Working Condition	208	6.2	9.7
	QXEM-A115	11.5	6871.15	2015	630	3.2	20uF/450V	干衣机工况 HPD Working Condition	208	6.2	9.7
B	QXEM-B18	17.5	10338	3030	930	3.26	35μF/450V	干衣机工况 HPD Working Condition	280	9.7	12.2

③干衣机压缩机 Compressor for HPD

R134a DC Inverter

系列 Series	压缩机型号 Model	排量 Displ.(cc)	冷量 Capacity (Btu/h)	制冷量 Refrigerating Capacity (W)	功率 Power (W)	COP (W/W)	测试频率 Test Frequency	测试工况 Test Conditions	压缩机高度 Compressor Height (mm)	排气管内径 Discharge Pipe ID (mm)	回气管内径 Suction Pipe ID (mm)
K	ETz-SK075AP	7.5	3583	1050	350	3.00	60Hz	干衣机工况 HPD Working Condition	164.5	6.2	8.2

R290 T1 [1φ]220-240V 50Hz

系列 Series	压缩机型号 Model	排量 Displ.(cc)	冷量 Capacity (Btu/h)	制冷量 Refrigerating Capacity (W)	功率 Power (W)	COP (W/W)	电容 Capacitor(μF)	测试工况 Test Conditions	压缩机高度 Compressor Height (mm)	排气管内径 Discharge Pipe ID (mm)	回气管内径 Suction Pipe ID (mm)
N	※QXDM-N062	6.2	4386	1285	395	3.25	15uF/450V	干衣机工况 HPD Working Condition	215	8.2	9.7
	※QXDM-N065	6.5	4596	1347	409	3.29	15uF/450V	干衣机工况 HPD Working Condition	219	8.2	9.7
	※QXDM-N068	6.9	4843	1420	430	3.30	15uF/450V	干衣机工况 HPD Working Condition	223	8.2	9.7
A	※QXDM-A062	6.2	4420	1295	390	3.32	15uF/450V	干衣机工况 HPD Working Condition	203	8.2	9.7
	※QXDM-A081	8.1	5802	1700	500	3.40	20uF/450V	干衣机工况 HPD Working Condition	213	8.2	9.7

备注：型号带“※”,代表开发中。“▲”代表推荐机型。
Note: A model with “※” is under development.
A model with “▲” is the recommended model.

COMPRESSOR FOR BASE STATION AC/ CABINET COMPRESSOR
基站/机柜用压缩机

④基站/机柜用压缩机 Base Station/Cabinet Compressor

技术特点 Techinical Features

A 环保冷媒 Eco-friendly refrigerant

•臭氧层破坏潜能 Ozone depletion potential (ODP) is zero.

B 高环温可用 Available for high temp. ambient

•最高使用环境温度可达54℃ Maximum temp. of 54 degrees centigrade.

C 适合电压波动大地区 Applicable to large voltage fluctuation area

•过负荷能力最低可至额定电压的0.8倍 The overload capacity is as low as 0.8 times of the rated voltage.

D 超长使用寿命 Ultra-long service life

•设计寿命达10年 The service life is up to 10 years.

E 低噪声/低振动 Low noise/vibration

•超静音无察觉运行 Ultra-quite operation.

压缩机型谱 Product Spectrum

机柜用压缩机 Cabinet Compressor								
产品类别 Product Category		压缩机能力范围 Capacity Range						
冷媒 Refrigerant	电压/频率 Voltage V/ Frequency	BTU/h	1024	6824	11942	17060	22178	27296
		W	300	2000	3500	5000	6500	8000
R134a	220-240V/50Hz & 220-240V/60Hz	(3100-13900 BTU/h)						
	DC	(1024-27300 BTU/h)						

压缩机产品规格 Compressor Spec.

R134a T1 [1φ]220-240V 50Hz/60Hz

系列 Series	压缩机型号 Model	排量 Displ.(cc)	冷量 Capacity (Btu/h)	制冷量 Refrigerating Capacity (W)	功率 Power (W)	COP (W/W)	电容 Capacitor(μF)	测试工况 Test Conditions	压缩机高度 Compressor Height (mm)	排气管内径 Discharge Pipe ID (mm)	回气管内径 Suction Pipe ID (mm)
B	QXEM-B18	17.5	7015	2056	670	3.07	35μF/450V	ASHRAE/T	280	9.7	12.2
A	QXEM-A115	11.5	4436	1300	468	2.78	20μF/450V	ASHRAE/T	208	6.2	9.7

R134a T1 [1φ]220-240V 50Hz

系列 Series	压缩机型号 Model	排量 Displ.(cc)	冷量 Capacity (Btu/h)	制冷量 Refrigerating Capacity (W)	功率 Power (W)	COP (W/W)	电容 Capacitor(μF)	测试工况 Test Conditions	压缩机高度 Compressor Height (mm)	排气管内径 Discharge Pipe ID (mm)	回气管内径 Suction Pipe ID (mm)
A	QXEM-A081	8.1	3173	930	326	2.85	15uF/450V	ASHRAE/T	203	6.2	9.7
N	※QXEM-N115	11.5	6993	2050	660	3.1	25uF/450V	干衣机工况 HPD Working Condition	216	6.2	9.7
B	※QXEM-B222	22.1	13885	4070	1140	3.58	40uF/450V	干衣机工况 HPD Working Condition	253.5	9.7	12.2

R134a DC 48V

系列 Series	压缩机型号 Model	排量 Displ.(cc)	冷量 Capacity (Btu/h)	制冷量 Refrigerating Capacity (W)	功率 Power (W)	COP (W/W)	电容 Capacitor(μF)	测试工况 Test Conditions	压缩机高度 Compressor Height (mm)	排气管内径 Discharge Pipe ID (mm)	回气管内径 Suction Pipe ID (mm)
D	▲ETz-AD253AEAB	25.3	10372	3040	870	3.50	/	ASHRAE/T	295	9.7	12.2
A	ESz48-AA088ACBA	8.8	3566	1045	306	3.42	/	ASHRAE/T	276	8.2	9.7
G	ESz48-AG036APCA	3.6	1965	576	190	3.02	/	ASHRAE/T	163	6.2	8.2
B	ESz48-AB138ACBA	13.8	7097	2080	620	3.35	/	ASHRAE/T	283	8.2	12.87

R134a DC 220V

系列 Series	压缩机型号 Model	排量 Displ.(cc)	冷量 Capacity (Btu/h)	制冷量 Refrigerating capacity (W)	功率 Power (W)	COP (W/W)	电容 Capacitor(μF)	测试工况 Test Conditions	压缩机高度 Compressor Height (mm)	排气管内径 Discharge Pipe ID (mm)	回气管内径 Suction Pipe ID (mm)
F	※QXEM-F428z	42.8	21760	6400	1950	3.28	/	ASHRAE/T	410	12.2	16.2

备注：型号带“※”,代表开发中。“▲”代表推荐机型。
Note: A model with “※” is under development.
A model with “▲” is the recommended model.

INDUSTRIAL REFRIGERATION COMPRESSOR
工业制冷用压缩机

⑤工业制冷用压缩机 Industrial Refrigeration Compressor

技术特点 Techinical Features

A 适应不同工业电压 Applicable to different industrial voltages

•兼有三相220V及三相380V产品 Compatible with 3-phase 220V and 3-phase 380V products.

B 一机双频 Multi-frequency operation

•50/60Hz通用 Available for 50/60Hz frequency condition.

C 超长使用寿命 Ultra-long service life

•设计寿命达10年 The service life is up to 10 years.

D 低噪声/低振动 Low noise/vibration

•超静音无察觉运行 Ultra-quite operation.

压缩机型谱 Product Spectrum

工业制冷用压缩机 Industrial Refrigeration Compressor										
产品类别 Product Category		压缩机能力范围 Capacity Range								
冷媒 Refrigerant	电压/频率 Voltage V/ Frequency	BTU/h	1706	5118	8530	11942	15354	18766	22178	25590
		W	500	1500	2500	3500	4500	5500	6500	7500
R407C	220-240V 50Hz/60Hz &208-230V 60Hz	(8200-23000 BTU/h)								
	380V 50Hz/60Hz	(8500-24000 BTU/h)								

⑤工业制冷用压缩机 Industrial Refrigeration Compressor

压缩机产品规格 Compressor Spec.

R407C T1 [3φ]220-240V 50Hz/60Hz

系列 Series	压缩机型号 Model	排量 Displ.(cc)	冷量 Capacity (Btu/h)	制冷量 Refrigerating Capacity (W)	功率 Power (W)	COP (W/W)	频率 Frequency(Hz)	测试工况 Test Conditions	压缩机高度 Compressor Height (mm)	排气管内径 Discharge Pipe ID (mm)	回气管内径 Suction Pipe ID (mm)
F	QXC-F34w	33.7	22888	6708	2208	3.04	60	ASHRAE/T	367	9.7	15.6
		33.7	18520	5428	1865	2.91	50	ASHRAE/T			
D	QXC-D273w	27.3	18841	5522	1758	3.14	60	ASHRAE/T	324.5	9.7	12.87
		27.3	15695	4600	1515	3.04	50	ASHRAE/T			
B	QXC-B18w	17.5	11918	3493	1130	3.09	60	ASHRAE/T	296.5	9.7	12.2
		17.5	10024	2938	993	2.96	50	ASHRAE/T			
B	QXC-B15w	15.02	10366	3038	955	3.18	60	ASHRAE/T	292.5	9.7	12.2
		15.02	8445	2475	832	2.97	50	ASHRAE/T			

R407C T1 [3φ]380V 50Hz/60Hz

系列 Series	压缩机型号 Model	排量 Displ.(cc)	冷量 Capacity (Btu/h)	制冷量 Refrigerating Capacity (W)	功率 Power (W)	COP (W/W)	频率 Frequency(Hz)	测试工况 Test Conditions	压缩机高度 Compressor Height (mm)	排气管内径 Discharge Pipe ID (mm)	回气管内径 Suction Pipe ID (mm)
F	QXC-F34s	33.7	23423	6865	2156	3.18	60	ASHRAE/T	367	9.7	15.6
		33.7	19694	5772	1814	3.18	50	ASHRAE/T			
D	QXC-D273s	27.3	19346	5670	1760	3.22	60	ASHRAE/T	324.5	9.7	12.87
		27.3	16002	4690	1630	2.88	50	ASHRAE/T			
B	QXC-B18s	17.5	11976	3510	1121	3.13	60	ASHRAE/T	296.5	9.7	12.2
		17.5	10004	2932	983	2.98	50	ASHRAE/T			
B	QXC-B15s	15.02	10195	2988	959	3.12	60	ASHRAE/T	292.5	9.7	12.2
		15.02	8530	2500	849	2.94	50	ASHRAE/T			

R407c T1 [1φ]208-230V 60Hz

系列 Series	压缩机型号 Model	排量 Displ.(cc)	冷量 Capacity (Btu/h)	制冷量 Refrigerating Capacity (W)	功率 Power (W)	COP (W/W)	电容 Capacitor(μF)	测试工况 Test Conditions	压缩机高度 Compressor Height (mm)	排气管内径 Discharge Pipe ID (mm)	回气管内径 Suction Pipe ID (mm)
B	QXC-B18r	17.5	11942	3500	1155	3.03	30	ASHRAE/T	296.5	9.7	12.2

⑥微型压缩机 Mini Compressor

技术特点 Technical Features

A 小巧便携 Small and portable

•高度仅88.5mm，重量仅0.89KG 88.5mm high, weighing 0.89KG.

B 环保高效 High efficiency and environmental protection

•COP高达2.72，采用R134a环保冷媒 Adopt R134a refrigerant, the COP is as high as 2.72.

C 高可靠性 High reliability

•超强耐久力，耐高温 Super durability,resistant to high temperatures.

D 应用范围广 Wide Applications

•家用设备、商用设备、医疗用冷却系统、军事消防等
Household equipment, commercial equipment, medical cooling system and military fire protection, etc.

压缩机产品规格 Compressor Spec.

R134a DC 48V											
系列 Series	压缩机型号 Model	排量 Displ.(cc)	冷量 Capacity (Btu/h)	制冷量 Refrigerating Capacity (W)	功率 Power (W)	COP (W/W)	频率 Frequency(Hz)	测试工况 Test Conditions	压缩机高度 Compressor Height (mm)	排气管内径 Discharge Pipe ID (mm)	回气管内径 Suction Pipe ID (mm)
P	QXE-P014z	1.4	853	250	92	2.717	/	普通工况 Normal Working Condition	89.7	6.2	6.5

备注：型号带“※”,代表开发中。“▲”代表推荐机型。
Note: A model with “※” is under development.
A model with “▲” is the recommended model.

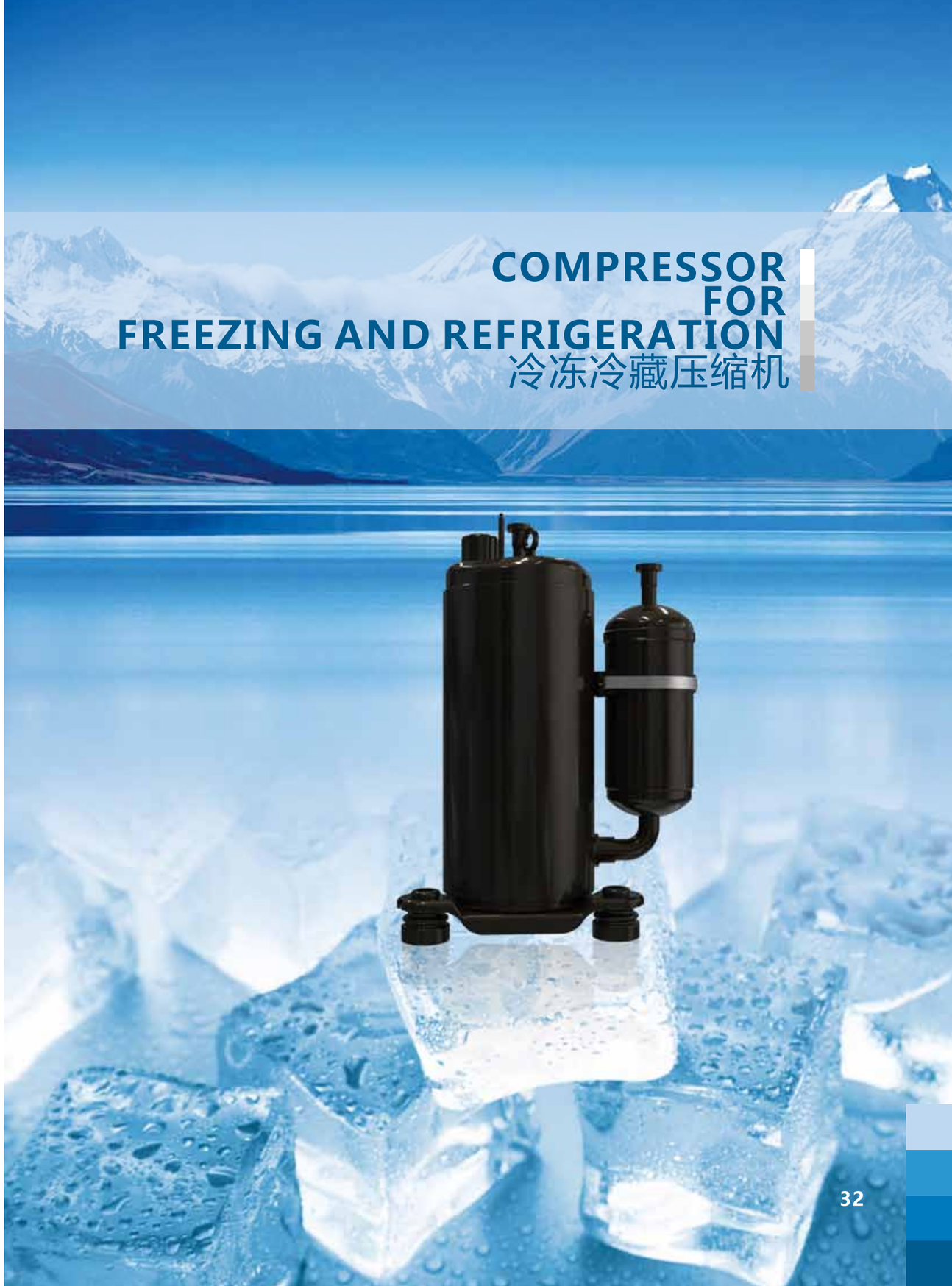

⑦冷冻冷藏压缩机 Compressor for Freezing and Refrigeration

技术特点 Technical Features

A 环保冷媒 Eco-friendly refrigerant

•主流冷冻冷藏用低GWP冷媒 Adopt main refrigerants with low GWP.

B 安全可靠Safe and Reliable

•满足多工况下频繁启动冲击 Meet the frequent startup under the different working conditions.

C 低温制冷特性 Good refrigerating performance

•低蒸发温度下制冷效率优良 High cooling efficiency at low evaporating temp.

D 低噪声/低振动 Low noise/vibration

•超静音无察觉运行 Ultra-quiet operation.

压缩机型谱 Product Spectrum

冷冻冷藏压缩机 Compressor for Freezing and Refrigeration

产品类别 Product Category			压缩机能力范围 Capacity Range											
应用领域 Application area	冷媒 Refrigerant	电压/频率 Voltage V/ Frequency	BTU/h	2047	5459	8871	12283	15695	19107	22519	25931	29343	32755	36167
			W	600	1600	2600	3600	4600	5600	6600	7600	8600	9600	10600
冷藏 Refrigeration	R404A	220-240V/50Hz	(9900-33000 BTU/h)											
	R290	220-240V/50Hz			(4800-9500 BTU/h)									
冷冻 Freezing	R404A	380V/50Hz				(10000-20000 BTU/h)								
	R404A	220-240V/50Hz			(4000-10000 BTU/h)									
	R404A	DC			(6500-10500 BTU/h)									
	R290	220-240V/50Hz			(4800-9500 BTUT/h)									

压缩机产品规格 Compressor Spec.

冷藏用压缩机 R404A [1φ]220-240V 50Hz

系列 Series	压缩机型号 Model	排量 Displ.(cc)	冷量 Capacity (Btu/h)	制冷量 Refrigerating Capacity (W)	功率 Power (W)	COP (W/W)	电容 Capacitor(μF)	测试工况 Test Conditions	压缩机高度 Compressor Height (mm)	排气管内径 Discharge Pipe ID (mm)	回气管内径 Suciton Pipe ID (mm)
C	MGu160CXSa030	16.8	9961	2921	1052	2.78	35uF/450V	ASHRAE/T	243	9.7	12.2
	MGu238CXSe030	23.8	14834	4350	1500	2.90	35uF/450V	ASHRAE/T	267	9.7	12.2
SF	MGu325FXSf050	32.5	19324	5667	2041	2.78	50uF/450V	ASHRAE/T	312	9.7	16.2
	MGu360FXSf050A	35.6	21244	6230	2200	2.83	50uF/450V	ASHRAE/T	327	9.7	12.2
	MGu438FXDe090	43.8	26042	7637	2751	2.78	60uF/450V	ASHRAE/T	337.2	9.7	15.6
	MGu490FXDn050	49.0	29783	8734	3168	2.76	70uF/450V	ASHRAE/T	357.2	9.7	16.2

冷藏用压缩机 R290 [1φ]220-240V 50Hz

系列 Series	压缩机型号 Model	排量 Displ.(cc)	冷量 Capacity (Btu/h)	制冷量 Refrigerating Capacity (W)	功率 Power (W)	COP (W/W)	电容 Capacitor(μF)	测试工况 Test Conditions	压缩机高度 Compressor Height (mm)	排气管内径 Discharge Pipe ID (mm)	回气管内径 Suction Pipe ID (mm)
B	QXD-B172	17.2	8652	2535	780	3.25	30uF/450V	ASHRAE/T	275.5	9.7	12.2
C	QXD-C184	18.4	9378	2750	820	3.35	25uF/450V	ASHRAE/T	277	9.7	12.2

备注：型号带“※”,代表开发中。“▲”代表推荐机型。
Note: A model with “※” is under development.
A model with “▲” is the recommended model.

产品介绍 Product Introduction

⑦冷冻冷藏压缩机 Compressor for Freezing and Refrigeration

冷冻用压缩机 R404A DC Inverter

系列 Series	压缩机型号 Model	排量 Displ.(cc)	冷量 Capacity (Btu/h)	制冷量 Refrigerating Capacity (W)	功率 Power (W)	COP (W/W)	测试频率 Test Frequency	测试工况 Test Conditions	压缩机高度 Compressor Height (mm)	排气管内径 Discharge Pipe ID (mm)	回气管内径 Suction Pipe ID (mm)
D	QYGTL-D20zY	20.0	6416	1880	1450	1.29	/	冷冻冷藏工况 Freezing Condition	206	9.7	12.2

冷冻用压缩机 R404A [1φ]220-240V 50Hz

系列 Series	压缩机型号 Model	排量 Displ.(cc)	冷量 Capacity (Btu/h)	制冷量 Refrigerating Capacity (W)	功率 Power (W)	COP (W/W)	电容 Capacitor(μF)	测试工况 Test Conditions	压缩机高度 Compressor Height (mm)	排气管内径 Discharge Pipe ID (mm)	回气管内径 Suction Pipe ID (mm)
D	QYGTL-D159Y	15.9	4060	1200	1000	1.20	45uF/450V	冷冻冷藏工况 Freezing Condition	206	9.7	12.2
	QYGTL-D20Y	20.0	5260	1540	1270	1.21	45uF/450V	冷冻冷藏工况 Freezing Condition	206	9.7	12.2
F	QYGSL-F325Y	32.5	8262	2423	1923	1.26	50uF/450V	冷冻冷藏工况 Freezing Condition	200	9.7	16.2
SF	QYGSL-F413Y	41.3	9560	2800	2250	1.24	60uF/450V	冷冻冷藏工况 Freezing Condition	203	9.7	16.2
D	QXGTL-D159F030	15.9	4060	1190	980	1.21	45uF/450V	冷冻冷藏工况 Freezing Condition	382	9.7	12.2
	QXGTL-D20F030	20.0	5976	1750	1340	1.31	45uF/450V	冷冻冷藏工况 Freezing Condition	382	9.7	12.2
F	QXGTL-F310N050	31.0	7513	2200	1920	1.15	55uF/450V	冷冻冷藏工况 Freezing Condition	405	9.7	16.2

冷冻用压缩机 R404A [3φ]380V 50Hz

系列 Series	压缩机型号 Model	排量 Displ.(cc)	冷量 Capacity (Btu/h)	制冷量 Refrigerating Capacity (W)	功率 Power (W)	COP (W/W)	电容 Capacitor(μF)	测试工况 Test Conditions	压缩机高度 Compressor Height (mm)	排气管内径 Discharge Pipe ID (mm)	回气管内径 Suction Pipe ID (mm)
F	QXGSL-F41sN050	41	10832	3180	2140	1.50	/	冷冻冷藏工况 Freezing Condition	432	9.7	16.2
	QXGSL-F475sN450	48	12548	3680	2478	1.50	/	冷冻冷藏工况 Freezing Condition	434	9.7	16.2
H	QXGSL-H72sN330	72	19360	5400	3660	1.47	/	冷冻冷藏工况 Freezing Condition	488	12.87	19.3
	QXGSL-H84sN345	84	22151	6400	4570	1.40	/	冷冻冷藏工况 Freezing Condition	495	12.87	19.3

中低温冷冻冷藏用压缩机 R290 T1 [1φ]220-240V 50Hz

系列 Series	压缩机型号 Model	排量 Displ.(cc)	冷量 Capacity (Btu/h)	制冷量 Refrigerating Capacity (W)	功率 Power (W)	COP (W/W)	电容 Capacitor(μF)	测试工况 Test Conditions	压缩机高度 Compressor Height (mm)	排气管内径 Discharge Pipe ID (mm)	回气管内径 Suction Pipe ID (mm)
D	QYDL-D238Y	23.8	4805	1408	884	1.59	40uF/450V	冷冻冷藏工况 Freezing Condition	186	12.2	9.7

备注：型号带“※”,代表开发中。“▲”代表推荐机型。
Note: A model with “※” is under development.
A model with “▲” is the recommended model.

冷冻冷藏 Freezing and Refrigeration

VEHICLE COMPRESSOR
车载用压缩机

⑧车载压缩机 Vehicle Compressor

技术特点 Technical Features

A 高效润滑系统，保证压缩机平稳运行，提高使用寿命；
Efficient lubrication system ensures the stable operation and longer service life.

B 耐振动性强，使其在复杂环境中稳定可靠运行；
Strong vibration resistance, to ensure normal operation in the complex environment;

C 结构紧凑，高冷重比，适应性强；
Compact structure and strong adaptability, with high cold-weight ratio;

D 双级增焓结构压缩机，-30℃强劲制热，运行范围更广，热管理系统采暖舒适性高；
Two-stage enthalpy-increasing compressor can realize strong heating at -30℃,with wider operating range and more comfort heating.

E 更高效，更节能，提升续航里程。
Higher efficiency, energy-saving, longer endurance range.

⑧车载压缩机 Vehicle Compressor

压缩机产品规格 Compressor Spec.

房车空调压缩机 R410A [1φ] 115V 60Hz

系列 Series	压缩机型号 Model	排量 Displ.(cc)	冷量 Capacity (Btu/h)	制冷量 Refrigerating Capacity (W)	功率 Power (W)	COP (W/W)	电容 Capacitor(μF)	测试工况 Test Conditions	压缩机高度 Compressor Height (mm)	排气管内径 Discharge Pipe ID (mm)	回气管内径 Suction Pipe ID (mm)
B	※QXA-B102x	10.2	10065	2950	990	2.98	60uF/250V	ASHRAE/T	261.5	9.7	9.7
	QXA-B129x	12.9	12966	3800	1320	2.88	60uF/250V	ASHRAE/T	261.5	9.7	9.7
	QXA-B139x	13.9	14228	4170	1465	2.85	60uF/250V	ASHRAE/T	261.5	9.7	9.7

房车空调压缩机 R410A [1φ] 220~240V 50Hz

系列 Series	压缩机型号 Model	排量 Displ.(cc)	冷量 Capacity (Btu/h)	制冷量 Refrigerating Capacity (W)	功率 Power (W)	COP (W/W)	电容 Capacitor (μF)	测试工况 Test Conditions	压缩机高度 Compressor Height (mm)	排气管内径 Discharge Pipe ID (mm)	回气管内径 Suction Pipe ID (mm)
B	QYA-B106YB	10.6	8530	2500	890	2.8	35	ASHRAE/T	175.4	9.7	12.2
C	※QYA-C133YA	13.3	11260	3300	1180	2.8	40	ASHRAE/T	183.4	9.7	12.2

电动大巴空调压缩机 R410A DC [400~700V]

系列 Series	压缩机型号 Model	排量 Displ.(cc)	冷量 Capacity (Btu/h)	制冷量 Refrigerating Capacity (W)	功率 Power (W)	COP (W/W)	运行频率范围 Frequency Range	测试工况 Test Conditions	压缩机高度 Compressor Height (mm)	排气管内径 Discharge Pipe ID (mm)	回气管内径 Suction Pipe ID (mm)
SF	YAQz-SF295AY-B	29.5	31031	9100	3030	3.00	30-120Hz	ASHRAE/T	186	9.7	16.2
	YAQz-SF428AY-B	42.8	44501	13050	4350	3.00	30-120Hz	ASHRAE/T	189	9.7	16.2
SH	YAQz-SH640AY	64	71269	20900	6800	3.07	30-85Hz	ASHRAE/T	183	16.2	19.3

电动大巴空调涡旋压缩机 R410A DC [400-700V]

系列 Series	压缩机型号 Model	排量 Displ.(cc)	冷量 Capacity (Btu/h)	制冷量 Refrigerating Capacity (W)	功率 Power (W)	COP (W/W)	运行频率范围 Frequency Range	测试工况 Test Conditions	压缩机高度 Compressor Height (mm)	排气管内径 Discharge Pipe ID (mm)	回气管内径 Suction Pipe ID (mm)
H	QV-AGG-H072zN	72	78498	23000	7600	3.00	20-100Hz	ASHRAE/T	210	16.1	22.4
	QV-AHG-H072zN	72	78498	23000	7600	3.00	20-100Hz	ASHRAE/T	210	16.1	22.4

驻车空调压缩机 R134a DC 24V

系列 Series	压缩机型号 Model	排量 Displ.(cc)	冷量 Capacity (Btu/h)	制冷量 Refrigerating Capacity (W)	功率 Power (W)	COP (W/W)	运行频率范围 Frequency Range	测试工况 Test Conditions	压缩机高度 Compressor Height (mm)	排气管内径 Discharge Pipe ID (mm)	回气管内径 Suction Pipe ID (mm)
SM	※YEQz24-SM151AY-A	15.1	7171	2100	635	3.31	30-75Hz	ASHRAE/T	154	9.7	12.2
	ETz24-SM151ATBA	15.1	7750	2170	700	3.24	/	ASHRAE/T	243.8	8.2	12.2

卧式压缩机 R410A [1φ]220-240V 50Hz

系列 Series	压缩机型号 Model	排量 Displ.(cc)	冷量 Capacity (Btu/h)	制冷量 Refrigerating Capacity (W)	功率 Power (W)	COP (W/W)	电容 Capacitor (μF)	测试工况 Test Conditions	压缩机高度 Compressor Height (mm)	排气管内径 Discharge Pipe ID (mm)	回气管内径 Suction Pipe ID (mm)
B	QYA-B106YA	10.6	8490	2490	900	2.77	35uF/450V	ASHRAE/T	174	9.7	12.2
	QYA-B125Y	12.5	10055	2950	1030	2.86	35uF/450V	ASHRAE/T	174	9.7	12.2
C	QYA-C133Y	13.3	10740	3150	1145	2.75	35uF/450V	ASHRAE/T	183	9.7	12.2

卧式压缩机 R134a [1φ]220-240V 50Hz

系列 Series	压缩机型号 Model	排量 Displ.(cc)	冷量 Capacity (Btu/h)	制冷量 Refrigerating capacity (W)	功率 Power (W)	COP (W/W)	电容 Capacitor (μF)	测试工况 Test Conditions	压缩机高度 Compressor Height (mm)	排气管内径 Discharge Pipe ID (mm)	回气管内径 Suction Pipe ID (mm)
A	QYE-A104Y	10.4	4024	1180	410	2.87	15uF/450V	ASHRAE/T	145	6.5	8.2

备注：型号带“※”,代表开发中。“▲”代表推荐机型。
Note: A model with “※” is under development.
A model with “▲” is the recommended model.

ASHRAE工况测试时EVI OFF，采暖工况测试时EVI ON。
EVI OFF during ASHRAE test conditions, EVI ON during heating conditions.

产品介绍 Product Introduction

压缩机标准尺寸示意图
Compressor Standard Size Diagram

压缩机尺寸范围 Compressor Dimension Range

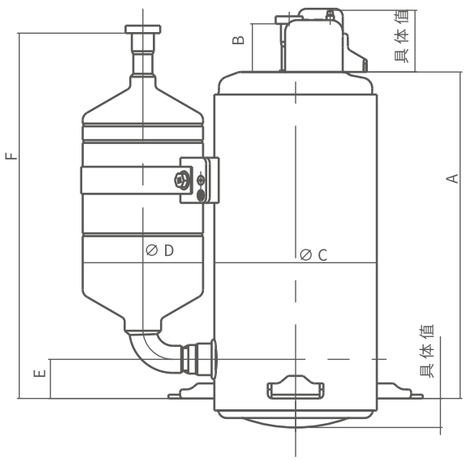

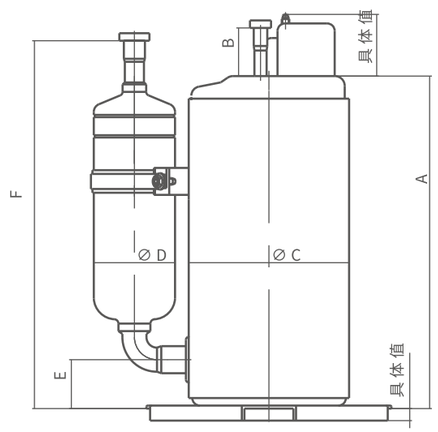

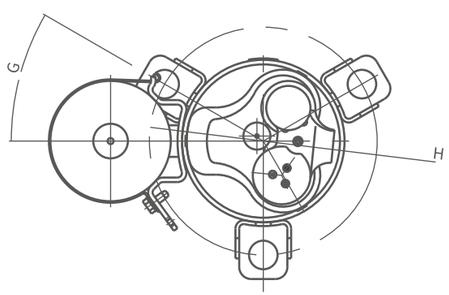

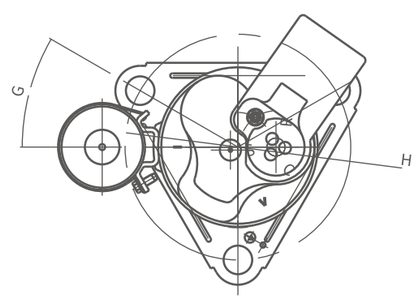

车载压缩机尺寸范围 Dimension Range of Vehicle Compressor

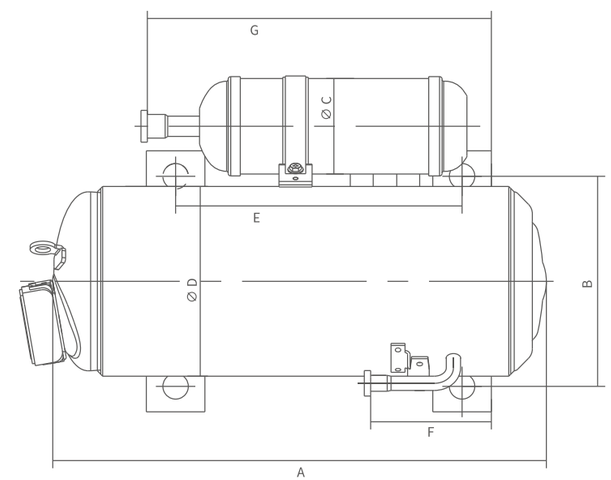

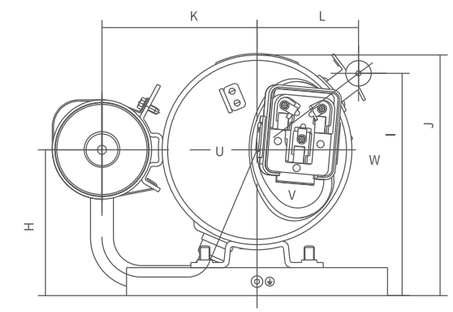

产品介绍 Product Introduction

冷冻冷藏压缩机尺寸范围
Dimension Range of Freezing& Refrigeration Compressor

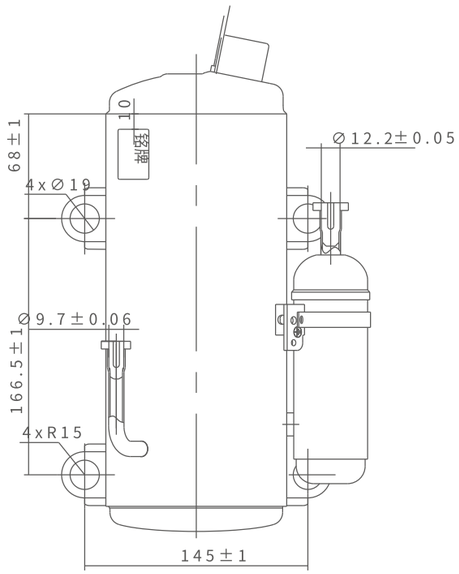

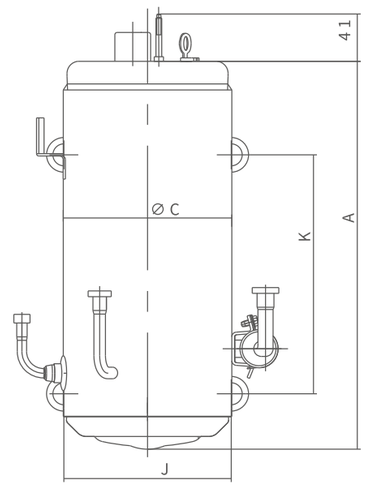

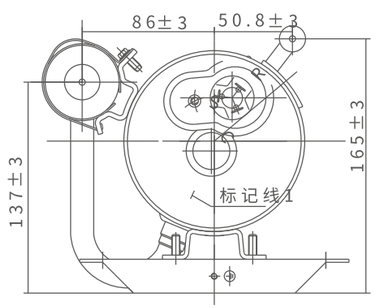

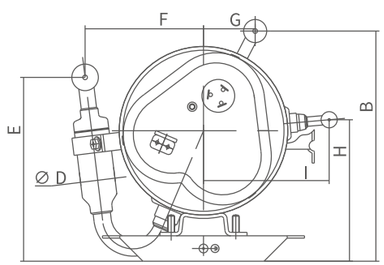

N系列 Series

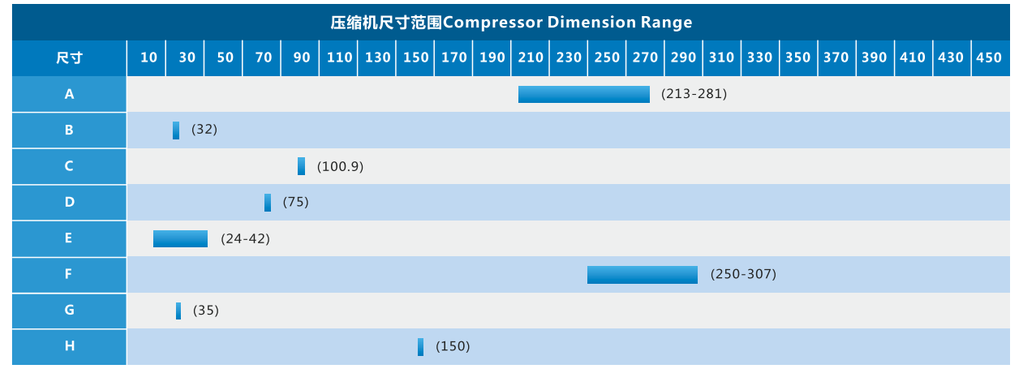

A系列 Series

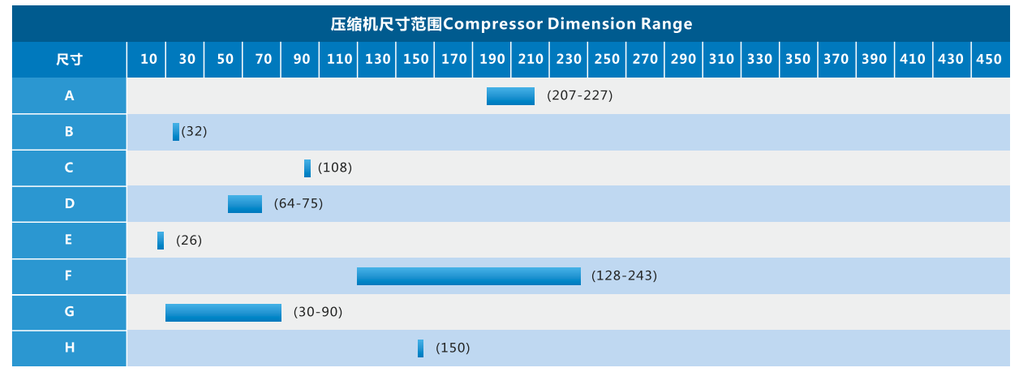

B系列 Series

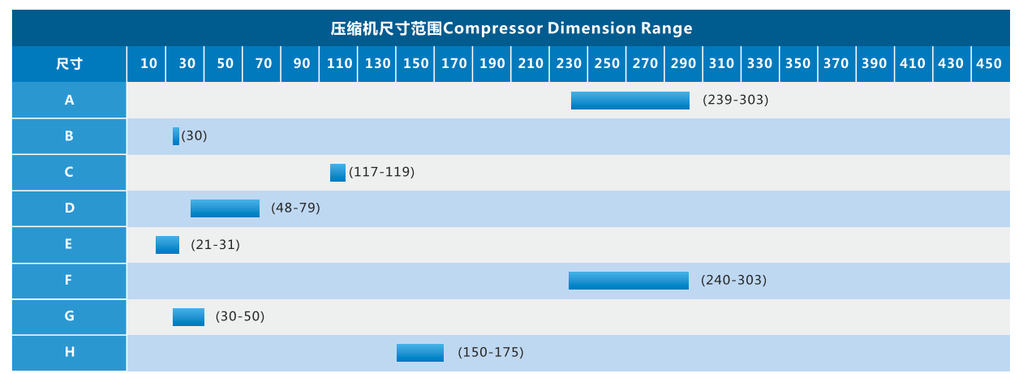

M系列 Series

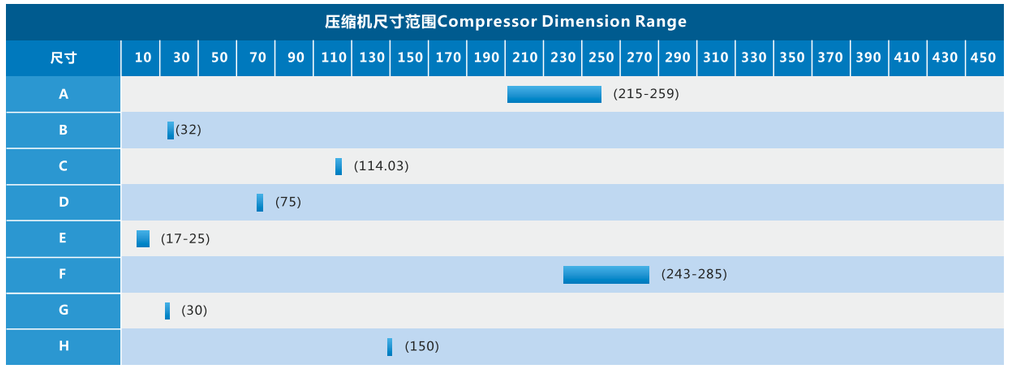

D系列 Series

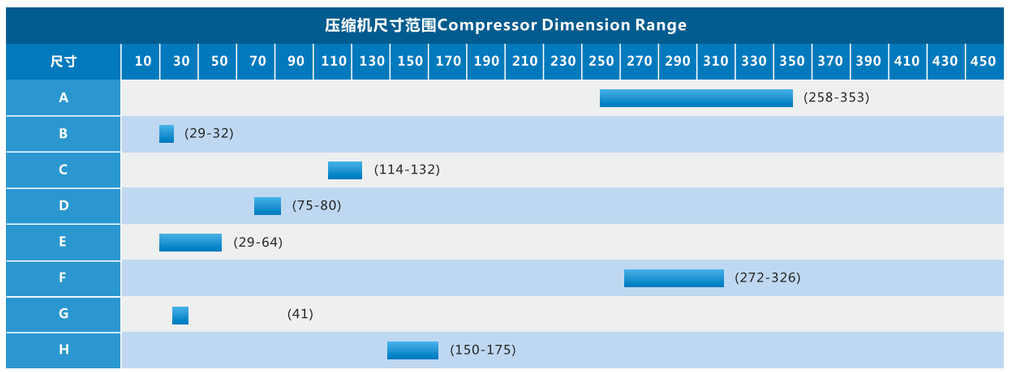

F系列 Series

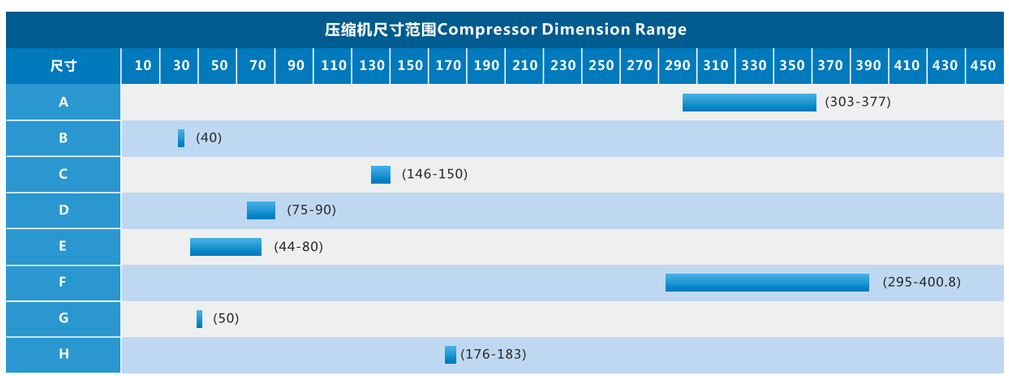

H系列 Series

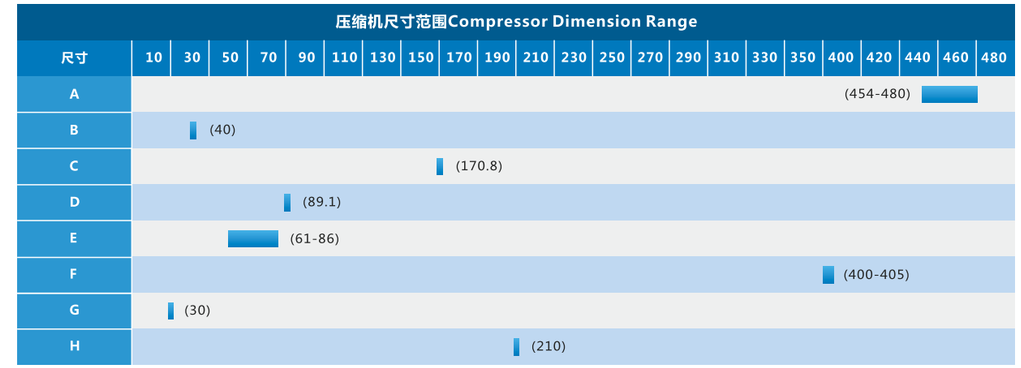

K、G、P系列 Series

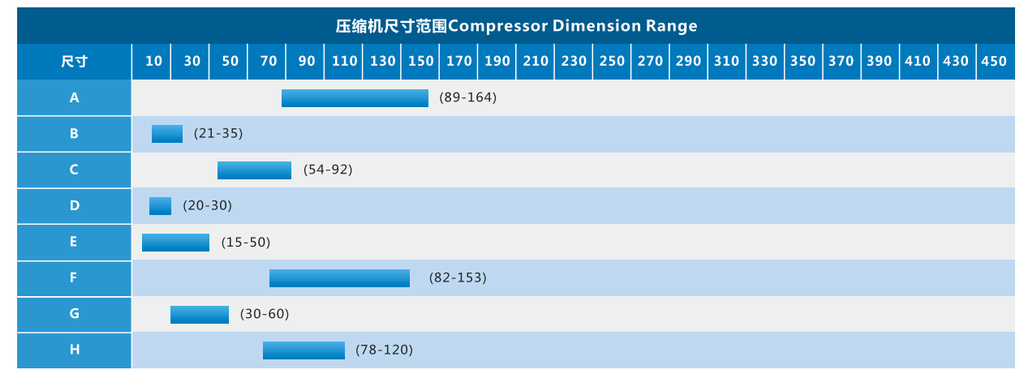

SF系列 Series

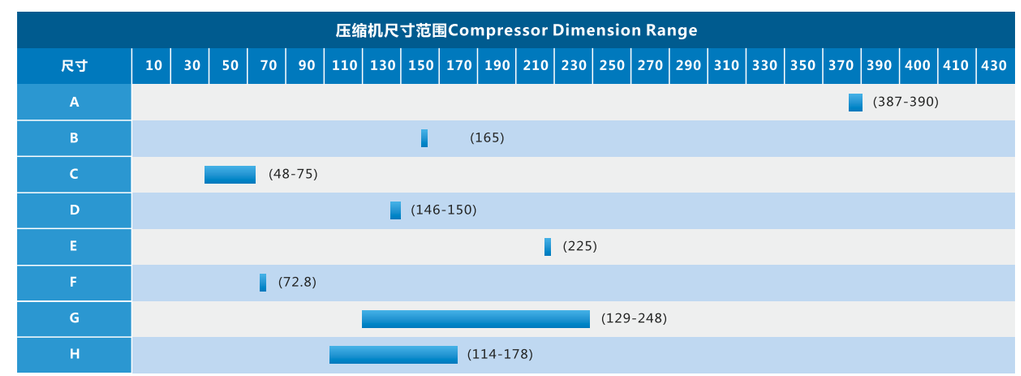

TH、SM、CF、TD、AB系列 Series

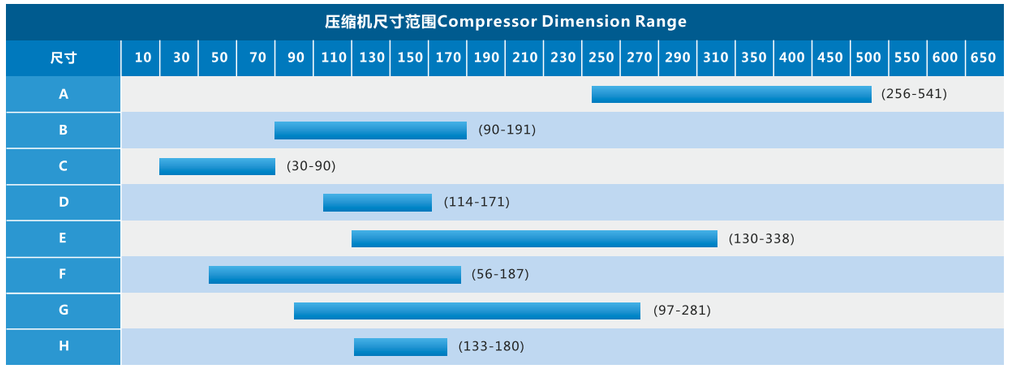

SN、CH系列 Series

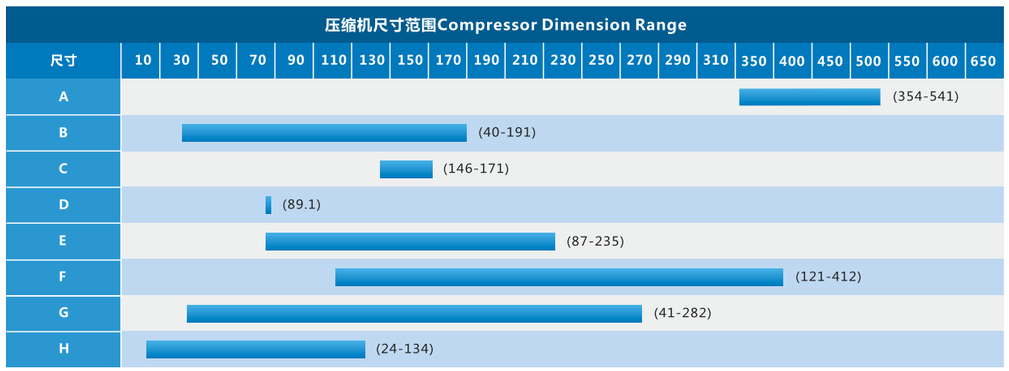

压缩机包装
Packing of Compressor

依据运输要求，分为包装Ⅰ和包装Ⅱ，分别见下图：
Packings are sorted as packing Ⅰ and packing Ⅱ according to the transport requirements, see the figure at below:

系列代号 Series Code	托盘规格 Pallet Spec. L(mm)xW(mm)	每箱数量 Qty. per Box (台 PC)	每箱高度 Height per Box H(mm)			每箱毛重(kg) Gross Weight per Box (kg)		
P	459×314	16	303	~	-	15	~	-
	1170×990	336	614	~	-	363	~	-
K	1150×1100	192	872	~	-	703	~	-
G-120mm底脚 G-120mm Foot	1150×1100	168	850	~	1050	810	~	1120
G-150mm底脚 G-150mm Foot	1150×1100	126	850	~	1050	810	~	900
N	1150×1100	72	740	~	870	580	~	680
A	1150×1100	72	740	~	870	500	~	760
M	1150×1100	72	780	~	980	610	~	900
B-150mm底脚 B-150mm Foot	1150×1100	72	810	~	970	680	~	1020
B-175mm底脚 B-175mm Foot	1150×1100	60	810	~	970	620	~	860
C	1150×1100	60	860	~	940	890	~	1000
D	1150×1100	50	890	~	1120	800	~	1070
E	1150×1100	50	950	~	1120	990	~	1230
F	1150×1100	48	900	~	1210	1010	~	1350
H	1150×1100	20	660	~	760	700	~	820

注：1）不含卧式机型，增焓机型等。
2）上表为各系列大部分的包装参数，特殊机型以实际为准
Note: 1) Horizontal models & Enthalpy-increasing models are not included.
2) The above are most of the packing data of each series,the special models shall be subject to the actual conditions.

包装一
Packing Ⅰ

包装二
Packing Ⅱ

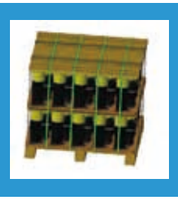

压缩机标准附件
Compressor Standard Accessories

标准附件 Standard Accessories		内保护器定速机种 Internal Protector Fixed Speed Model	外保护器定速机种 External Protector Fixed Speed Model	对应变频机种 Corresponding Inverter Model	
				需感温器 With Temp. Sensor	不需感温器 Without Temp. Sensor
端子罩 Terminal Cover		●			●
			●		
				●	
端子垫片 Terminal Gasket		●			●
			●		
				●	
端子螺母 Terminal Nut		●	●	●	●
外置保护器 External Protector			●		
感温器 Temperature Sensor				●	
橡胶垫 Rubber		●	●	●	●
		●	●	●	●

Technical Services
技术服务

多元化高效精品压缩机产品
Diversified and high quality compressors

性能、噪音、应力等整体式解决方案以及系统技术解决方案
Overall solutions for performance, noise, stress, and system

共同开发
Joint development

快速反应的生产供货服务
Rapid supply& delivery service